UNIVERSITI TEKNOLOGI MARA

BIOTYPE: BEHAVIORAL BIOMETRIC AUTHENTICATION SYSTEM USING KEYSTROKE DYNAMICS

MUHAMMAD ZULHAZIQ BIN NORAMIN

BACHELOR OF COMPUTER SCIENCE (Hons.)

JANUARY 2026

Universiti Teknologi Mara

BIOTYPE: Behavioral Biometric Authentication System Using Keystroke Dynamics

Muhammad Zulhaziq Bin Noramin

Thesis submitted in fulfilment of the requirements for Bachelor of Computer Science (Hons.)
Faculty of Computer and Mathematical Sciences

January 2026

SUPERVISOR APPROVAL

BIOTYPE : BEHAVIORAL BIOMETRIC AUTHENTICATION SYSTEM USING KEYSTROKE DYNAMICS

By

MUHAMMAD ZULHAZIQ BIN NORAMIN
2023239866

This thesis was prepared under the supervision of the project supervisor, Dr. Mohammad Hafiz Bin Mohd. Yusof. It was submitted to the Faculty of Computer and Mathematical Sciences and was accepted in partial fulfilment of the requirements for degree of Bachelor of Computer Science.

Approved by

……..
Dr. MOHAMMAD HAFIZ BIN MOHD. YUSOF
Project Supervisor

JANUARY 23, 2026

STUDENT DECLARATION

I certify that this thesis and the project to which it refers is the product of my own work and that any idea or quotation from the work of other people, published or otherwise are fully acknowledge in accordance with the standard referring practices of the discipline.

……
MUHAMMAD ZULHAZIQ BIN NORAMIN
2023239866

JANUARY 23, 2026

TABLE OF CONTENTS

CONTENT	PAGE
SUPERVISOR APPROVAL	ii
STUDENT DECLARATION	iii
TABLE OF CONTENTS	iv
LIST OF FIGURES	vi
LIST OF TABLES	vii
CHAPTER ONE: INTRODUCTION	
1.1 Background of Study	1
1.2 Problem Statement	2
1.3 Project Objective	4
1.4 Project Scope	5
1.5 Significance	6
1.6 Conclusion	7
CHAPTER TWO: LITERATURE REVIEW	
2.1 Overview of Research Domain	10
2.1.1 Behavioral Biometrics	11
2.2 Overview of Research Area	12
2.2.1 Machine Learning in Keystroke Authentication	12
2.2.2 Deep Learning Approaches	14
2.2.3 Siamese Neural Network	15
2.2.4 Supervised Learning	19
2.2.5 Evaluation Metrics	20
2.2.6 Cybersecurity	21

2.3 Comparison of Existing Systems 23
2.4 Justification of the Chosen Method, Technique and Features 30
2.5 Conclusion 30

CHAPTER THREE: METHODOLOGY 32

3.1 Methodology 32
3.1.1 Iterative Development Methodology 34
3.1.2 Application of Iterative Methodology to BioType 35
3.2 Summary of Project Methodology 39
3.3 System Architecture 41
3.4 Hardware & System Requirement 54
3.4.1 Hardware Requirement 54
3.4.2 Software Requirement 56
3.5 Conclusion 58
REFERENCES 59

LIST OF FIGURES

FIGURE	PAGE
2.1 Concept Map	9
2.2 Flowchart for selecting interpolation methods to unify keystroke dynamics data	17
2.3 Methodology for data fusion-based authentication using complex keystroke dynamics analysis	18
2.4 Architecture of an AI-Based Keystroke Authentication System using Supervised Learning	26
3.1 General Iterative Development Process	33
3.2 Iterative Development Cycle for Continuous Keystroke Dynamic Authentication	34
3.3 System Architecture of BioType: Behavioral Biometrics Authentication System using Keystroke Dynamics	42
3.4 User Device Layer for Keystroke Event Capture	43
3.5 Keystroke Timing Features Derived from Key Press and Key Release Events	45
3.6 Client-Side Keystroke Buffering and Event Transmission Mechanism	46
3.7 Sliding Window Segmentation of Continuous Keystroke Streams	47
3.8 Preprocessing and Data Fusion Pipeline for Keystroke Windows	48
3.9 GAFMAT-Based Siamese Neural Network Inference for Keystroke Dynamics Authentication	50
3.10 Session-Level Trust Evaluation, Decision Engine, and Logging for Continuous Authentication	52

LIST OF TABLES

TABLE **PAGE**

2.1 Performance of Machine Learning Models in Keystroke Authentication 13
2.2 Performance of Data Fusion Strategies in SNN Authentication 18
2.3 Advantages and Disadvantages of Traditional Password-Based Authentication 24
2.4 Key Features of Keystroke Dynamics 27
2.5 Key Features of Mouse Movements 27
2.6 Key Features of Touchscreen Interactions 28
2.7 Summary of Strength and Weakness in Existing Authentication Models 29
3.1 Iterative Development Stages for the BioType System 36
3.2 Summary of Project Methodology Based on Iterative Development 40
3.3 Hardware Requirements for End User 54
3.4 Hardware Requirements for System Development 55
3.5 Software Requirements for the BioType System 57

CHAPTER 1

INTRODUCTION

This chapter introduces the background and motivation behind the project BioType: Behavioral Biometric Authentication System Using Keystroke Dynamics. The study's history is presented first, then the problem statement that outlines the current authentication issues. The chapter concludes with a brief synopsis of the project's goals, scope, and importance.

1.1 Background of Study

In the modern digital world, user authentication is vital in ensuring that systems and personal data are not accessed by the wrong people. There is an ever-increasing need to develop safe and convenient authentication methods, as cloud applications, e-commerce, and online banking are becoming more and more a part of our lives. Conventional verification tools, including passwords and PINs, remain the most widespread, but they are more based on information that the user already knows than characteristics that identify them. Such credentials are highly vulnerable to cyberattacks and social engineering attacks because they may be stolen, guessed, or phished (Shadman et al., 2025). Moreover, the users are authenticated only once upon the login using the traditional methods and then the system assumes that the user is authenticated throughout the session. This single-point verification also shows a major security vulnerability called "session hijacking," which enables an attacker to impersonate a legitimate user without any further verification (Shobha et al., 2025). Academics and developers have been more attracted to biometric authentication, which verifies identity based on inherent physiological or behavioral traits, in an attempt to minimize this risk (Budzys et al., 2025).

Physiological biometrics such as fingerprint, facial or iris identification are strongly assured, but not typically suitable to be used in continuous verification, and may need special hardware. However, behavioral biometrics studies the distinctive user behavior that can be passively monitored without requiring any additional sensors, including mouse motion, touchscreen interaction, or typing rhythm (Shende et al., 2025). Keystroke dynamics has attracted attention as one of the human-computer interfaces since typing is a common human-computer interface, and keystroke dynamics is useful. The typing rhythm of every individual form a unique behavioral signature, which can be analyzed with the help of machine learning (ML) and deep learning (DL). These measures are the dwell time, which is the duration of key holding, and the flight time, which is the time between keystrokes (Muralidharan et al., 2025). However, recent studies have demonstrated that trained on keystroke data, such DL architectures as Convolutional Neural Networks (CNNs) and Long Short-Term Memory (LSTM) networks, or ML models such as Random Forest (RF) and Support Vector Machine (SVM) can achieve authentication accuracies of more than 95% (Muralidharan et al., 2025), (Valacich et al., 2025). Also, despite the typing behavior evolving with time, adaptive, real-time user verification is enabled through a combination of data fusion with AI-based anomaly detection (Budzys et al., 2025). In addition to security, behavioral biometrics are applied in areas where continuous identification and competency assessment is required, including remote learning and digital assessment (Bansal and Ouda, 2024). Considering these developments, this project proposes BioType, a web-based continuous authentication system, which utilizes ML models and dynamics of the keyboard to verify identification in the active session. The technology tries to fill a long-standing void in digital security, which has always relied on first-time login to determine user activity.

1.2 Problem Statement

In the modern digital world where everyone is connected, the overall strength of online security is essentially defined by the reliability of its authentication

processes. Ideally, an authentication solution must be secure enough to keep on checking the identity of a user in real-time during an active session to make sure that the individual accessing the system is the same individual who was logged in at the time of log-in until the time of log-out. This is the idea of constant authentication which is the standard of gold in securing sensitive data and critical systems. The truth though is that most of the systems, be it web applications or corporate networks are still based on outdated, non-dynamic, one-time verification methods. The most widespread methods are passwords, PINs, or one-time-passcodes (OTPs), which only confirm the identity of the user at the first stage of access (Shende et al., 2025). This is a very established legacy practice that is referred to as this front door security model. Its main and major weakness is that it works on a principle of assumed authenticity; once a user is authenticated the system has implicit trust on all the further actions in that session. This is a critical and exploitative security gap in architecture. It exposes the system to session hijacking attacks, whereby an attacker who has broken into the system or hijacked an active session can do whatever he pleases. The system is designed in such a way that it does not have a system to identify that the individual at the keyboard is no longer the authentic user. Although other contemporary methods such as physiological biometrics (e.g., fingerprint or facial recognition) provide high-precision identity proofing, they are also essentially unsuitable in continuous verification. These approaches are obtrusive, need dedicated hardware, and need active, conscious involvement of the user, which is not feasible in the context of the seamless, passive surveillance that is needed by real continuous security (Muralidharan et al., 2025). This creates a definite and unmet requirement of a test that is secure and non-invasive.

In order to address this, behavioral biometrics, namely, keystroke dynamics, have become a key focus of study (Valacich et al., 2025). In this area, the most advanced deep learning and data fusion methods have been developed. As an illustration, recent research (Budzys et al., 2025) shows a high level of accuracy when the various datasets are prepared and standardized through

data fusion procedures, where linear interpolation is the most suitable method to be used in this time-series.

This composite information is then inputted (e.g., with GAF-Mat transformation) into a strong, image-like representation and trained with "metric-learning" models, like Siamese Neural Networks (SNNs) with triplet loss functions to learn the deep similarity of a typing pattern of the user (Budzys et al., 2025). This, however, shows the fundamental weakness and aftereffect of the existing use: these highly potent and improved models are massively planned and executed as fixed, single verification mechanisms. They are very useful in authenticating a user once only (e.g., when a user types a password), but they do not provide any further monitoring of the user. Such abuse of potent models implies that when an attacker has circumvented this initial strong login, the system is unaware of post-login anomalies. The SNN model does not provide any extra security and the session remains as insecure as a normal password-secured session. Thus, the present project is aimed at filling this particular gap.

1.3 Project Objective

The goal of this project is to develop and assess a system that uses keyboard dynamics to provide continuous user identity verification. Its particular goals are:

I. To identify a machine learning model that will address the "static-only" application flaw in existing advanced keystroke dynamics methods, adapting it for continuous, real-time verification.

II. To develop a web-based authentication system based on the proposed machine learning model on continuous, real-time verification of the keystroke dynamics authentication method

III. To evaluate the system's dependability and performance using measures like accuracy, equal error rate (EER), false acceptance rate (FAR), and false rejection rate (FRR).

These goals are in line with current research that highlights continuous authentication driven by AI as a crucial component of contemporary cybersecurity systems (Shobha et al., 2025), (Muralidharan et al., 2025).

1.4 Project Scope

To guarantee a targeted and attainable research output, the BioType system's development and assessment are directed by a well-defined scope. The project is specifically limited to a desktop, web-based environment, with all behavioral data captured from a standard QWERTY keyboard. This intentional restriction eliminates the variables of mobile touch interfaces and specialized hardware, allowing for a thorough examination of keystroke dynamics in a common and essential platform. The primary biometric modality under investigation is keystroke dynamics, which entails analyzing the distinct temporal patterns of a user's typing, including key-specific metrics such as dwell time (the amount of time a key is pushed) and flight time (the gap between keystrokes). To construct and evaluate the model, a modest-scale dataset will be used, either from a reputable public source or collected from a controlled group of volunteers, to provide a practical and manageable basis for model training.

The technological implementation of this project marks a clear departure from conventional machine learning, explicitly moving away from traditional classifiers like Random Forest or Support Vector Machines (SVM). Instead, the core of this research scope is to investigate, adapt, and implement an advanced deep learning, metric-based model: the Siamese Neural Network (SNN), utilizing a triplet loss function. This specific architecture is chosen to directly address the project's primary objective adapting a powerful similarity-based model to solve the "static- only" flaw in existing methods. The scope therefore includes the critical data preprocessing and fusion techniques necessary for this model, such as linear interpolation to standardize and fuse the time-series data, and GAF-Mat

Transformation to convert the typing patterns into an image-like representation suitable for the SNN. Finally, while the project will discuss the crucial significance of data privacy, the full deployment of an advanced cryptographic system for secure template matching and storage is regarded as a future enhancement and is outside the current scope.

1.5 Significance

The BioType project is important because it addresses current security flaws and advances the science of behavioral biometrics. First and foremost, by adding a continuous and passive authentication layer, it significantly improves digital security. BioType's capacity to continuously confirm a user's identity based on their typing rhythm is a proactive protection strategy in contrast to conventional single- point login techniques, which are susceptible to session hijacking and post- login assaults. This is especially important for safeguarding sensitive activities in areas where maintaining the genuine user's presence is essential, such business networks, online exams, and remote banking.

This initiative has great potential to further research and practical acceptance in the field of AI-driven cybersecurity, even beyond its immediate security use. It functions as a solid proof-of-concept, showcasing keystroke dynamics' practicality as a non-intrusive, affordable, and hardware-independent security solution for actual online environments. The research produces useful empirical data and insights on model performance, feature relevance, and system robustness by methodically creating and assessing machine learning models for this job. These contributions are crucial for improving behavioral biometric technologies and opening the door for their incorporation into intelligent and adaptive security frameworks in the future.

1.6 Conclusion

In this chapter, the concept and motivation behind the development of BioType: Behavioral Biometric Authentication System Using Keystroke Dynamics were presented. The discussion outlined how the project aims to enhance digital security by introducing a continuous and intelligent authentication mechanism that verifies user identity throughout an active session. Unlike traditional static methods such as passwords and PINs, BioType leverages keystroke dynamics and machine learning to provide a seamless, real-time, and non-intrusive verification process. The chapter also established the project's objectives, scope, and significance, emphasizing its contribution to advancing behavioral biometric research and promoting AI-driven cybersecurity solutions. Overall, the initiative seeks to create a secure, efficient, and adaptive web-based authentication system that strengthens user protection and lays the groundwork for future innovations in continuous behavioral authentication

CHAPTER 2

LITERATURE REVIEW

This chapter reviews the existing research, theories, and technological approaches that support the development of BioType, a behavioral biometrics authentication system that uses keystroke dynamics. The discussion explores past studies related to biometrics, machine learning, and cybersecurity, as well as the growing interest in behavioral based authentication methods. Through this review, the chapter explains how researchers have examined user verification through physiological and behavioral traits, the progression of machine learning techniques from classical models to deep learning approaches, and the increasing importance of continuous authentication in modern security environments. The literature also evaluates the strengths and weaknesses of current authentication systems, including password-based methods, supervised learning models, and behavioral analysis platforms. By comparing these systems, the review identifies important gaps in existing solutions, especially the limitations of static authentication and the absence of real time, continuous monitoring. These findings establish the foundation for proposing a system that applies keystroke dynamics, data fusion techniques, and metric learning to achieve more secure and seamless user verification. To guide the structure of this chapter, a literature review map is presented. The map outlines the main domains which are Biometrics, Machine Learning, and Cybersecurity, and shows how each domain contributes to the design of the proposed system. This visual overview helps clarify the connections between the topics discussed in the chapter and demonstrates how the chosen methods and models support the creation of a more adaptive and reliable authentication framework.

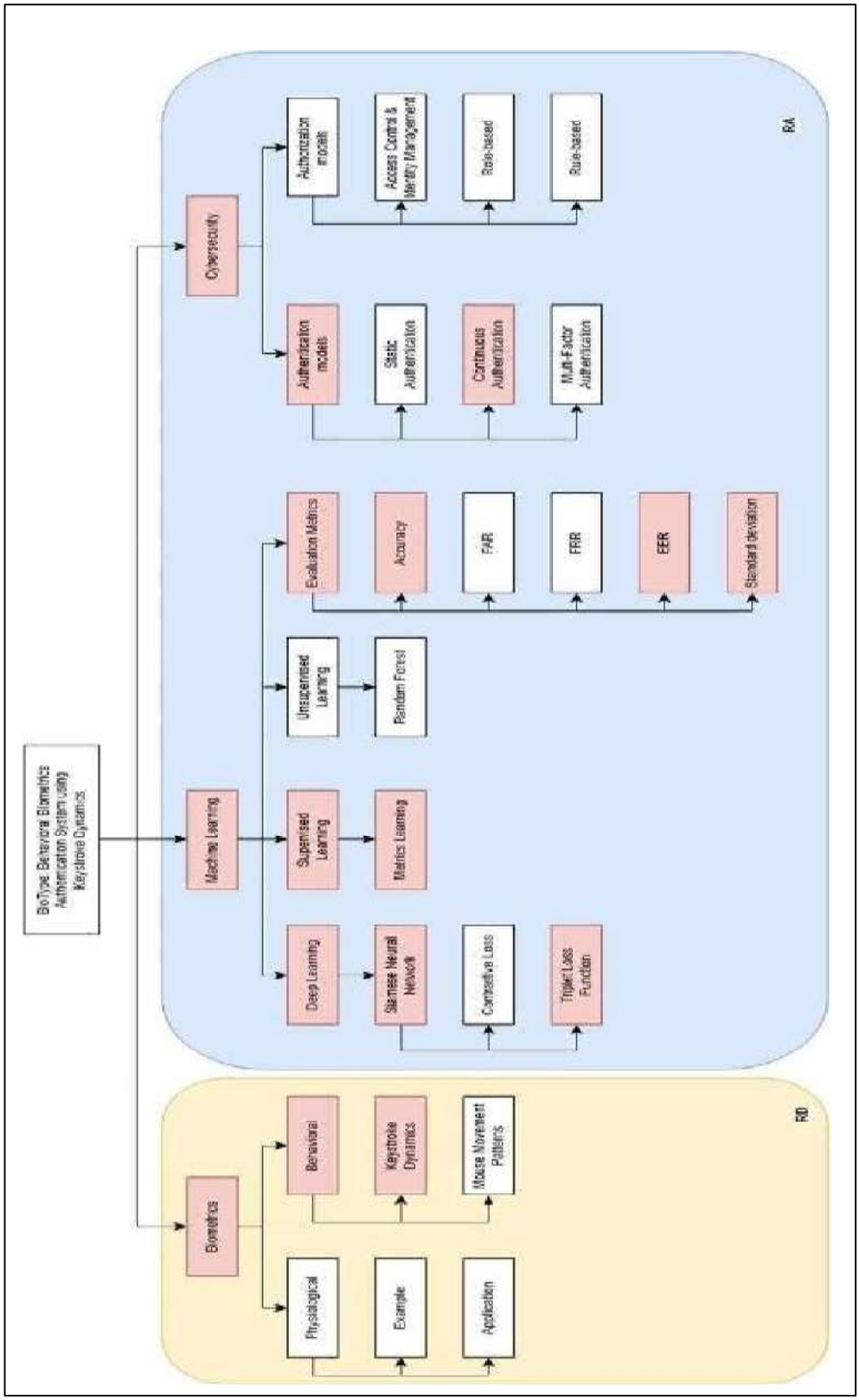

Figure 2.1 Concept Map

2.1 Overview of Research Domain

The blistering development of the digital services has demonstrated the vulnerability of the traditional security mechanisms, particularly, the ones that rely on the knowledge factor, i.e., passwords and PINs. These are fixed credentials that are becoming more susceptible to phishing, credential theft, and brute force attacks since they only confirm what a user knows but not who is accessing the system (Azmat, 2025). This has led to the emergence of biometric authentication as a significant alternative. Fingerprints and facial recognition are physiological biometrics that have stable and reliable identity verification (Hasan et al., 2025), but they cannot be reset once breached, posing a long-term security risk (Shrivastava and Bollavarapu, 2025; Subash et al., 2026).

These shortcomings have led to a shift in focus to the field of behavioral biometrics that authenticate identity based on individual and unconscious interaction patterns. The typing rhythm, mouse movement, and gesture patterns are the behavioral characteristics that are hard to imitate by attackers and do not need specific sensors, which makes them feasible in remote authentication (Shadman et al., 2025; Martins et al., 2025). In particular, the keystroke dynamics has proven to be one of the most effective approaches since it considers dwell time and flight time to create an individual typing profile (Shrivastava and Bollavarapu, 2025). Behavioral biometrics can be used to maintain continuous authentication of a user because they can be used in conjunction with other supporting signals such as mouse dynamics to track user behavior over the course of a session. This continuous authentication assists in averting post-log-in attacks like session hijacking that defeat a significant shortcoming of conventional single- time authentication systems (Shobha et al., 2025).

2.1.1 Behavioral Biometrics

Behavioral biometrics has emerged as a significant development in identity verification since it changes the emphasis on unchangeable physical characteristics to the dynamic interaction of people with digital machines. In contrast to physiological biometrics that identify a person with the help of stable features, behavioral biometrics research the way a person carries out specific activities, demonstrating natural tendencies and subconscious ones in many cases. According to research conducted by Subash et al. (2026), this method can be used to perform passive authentication, that is, the system can check a user in the background without disrupting his or her activity. This is why behavioral biometrics is particularly applicable to contemporary cybersecurity requirements since it allows supporting continuous authentication, i.e., the system tracks the user during the active session and prevents threats, like session hijacking following the log-in (Shobha et al., 2025). In this domain, keystroke dynamics has emerged as the most viable method of web- based security since it records timing and rhythm of typing pattern, dwell time and flight time that constitute a behavioral signature of each user (Shrivastava and Bollavarapu, 2025). One of the greatest benefits of keystroke dynamics is that it does not need special hardware and can be applied to any standard keyboard, which is very scalable and cost effective to be used widely (Martins et al., 2025).

In order to enhance the reliability of behavioral authentication, most of the studies use mouse movement analysis as a supplementary biometric attribute. This approach looks at the cursor tracks, velocity, acceleration, and the time of clicking to create another behavioral piece of evidence (Subash et al., 2026). Even though the use of mouse dynamics is not a substitute to the use of keystroke data but a support tool, the combination of these two inputs can assist in developing a more dependable multi modal authentication system. This combination minimizes the rate of false rejection and enhances resistance to spoofing since it is much harder to replicate the motor behavior of a real user on two or more devices than it is to steal a password (Wang et

al., 2022). These behavioral characteristics are integrated to create secure and non-disruptive verification mechanisms, which are consistent with the current Zero Trust security models, in which the identity of users' needs to be authenticated constantly during the use of the system (Gilbert and Gilbert, 2025).

2.2 Overview of Research Area

The effectiveness of any behavioral biometric system relies heavily on the computational framework used to analyze user interaction data. This area of study sits within the shared space of Machine Learning and Cybersecurity, focusing on how algorithmic models can be trained to detect the subtle and often unnoticed patterns that characterize human behavior. In the context of keystroke dynamics, machine learning acts as the core analytical component, converting raw timing information, including the milliseconds between key presses, into meaningful security decisions. Instead of depending on fixed, predefined rules, these models learn to differentiate a legitimate user from an intruder by recognizing complex behavioral patterns such as typing rhythm, overall speed, and characteristic error correction behavior (Muralidharan et al., 2025).

2.2.1 Machine Learning in Keystroke Authentication

The success of any behavioral biometric system depends on the computational framework that is applied in analyzing the data of user interaction. The field resides in the overlapping area of Machine Learning and Cybersecurity, in which the problem of using algorithmic models is studied to identify the hidden and often unseen trends that define human behavior. Machine learning can be viewed as the central analytical element in the context of keystroke dynamics, where raw timing data (the time difference between key presses, in milliseconds) is transformed into useful security judgements. These models do not rely on predefined, fixed rules but instead learn to distinguish between a legitimate user and an intruder by identifying

a complex behavioral pattern like typing rhythm, overall speed, and typical behavioral pattern of error correction (Muralidharan et al., 2025).

In keystroke authentication, classification is the most important task that the system should be able to do which is to identify whether the user is a genuine or an imposter by the typing information that is already stored. Numerous various algorithms have been experimented with by researchers to achieve this, starting with simple statistical models, to more sophisticated ensemble methods. The objective is to identify a model that is highly accurate and, at the same time, efficient enough to run in real-time without slowing down the machine of the user. In order to determine the most appropriate algorithm, recent research has compared these algorithms with known datasets, including the Carnegie Mellon University keystroke benchmark. Muralidharan et al. (2025) made a comparison of a broad range of models, such as classic classifiers, such as Random Forest and Support Vector Machines, and modern gradient boosting algorithms, such as LightGBM and XGBoost. Their findings, as indicated in Table 2.1, indicate a definite performance hierarchy of these methods.

Table 2.1 Performance of Machine Learning Models in Keystroke Authentication

Model	Accuracy	Precision	Recall	F1 Score	TT (s)	IT (s)
Random Forest	93.36%	93.50%	93.36%	93.33%	7.99	0.16
SVM	84.85%	85.09%	84.85%	84.86%	1.47	1.96
KNN	84.51%	85.59%	84.51%	84.43%	0.09	0.41
XGBoost	92.89%	93.11%	92.89%	92.92%	6.09	0.06
CNN	88.82%	88.97%	88.74%	88.57%	106.44	0.30
CNN (ES)	88.65%	88.61%	88.66%	88.47%	199.23	6.41
LSTM	88.55%	88.50%	88.63%	88.43%	123.91	9.10
LSTM (ES)	91.18%	91.13%	91.22%	91.07%	337.19	0.82
CNN-LSTM	83.92%	84.26%	83.97%	83.91%	182.99	0.92
CNN-LSTM (ES)	85.15%	85.31%	85.28%	85.15%	282.04	1.04
Decision Tree	71.52%	71.49%	71.64%	71.38%	0.73	0.00
GBM	92.40%	92.50%	92.35%	92.34%	430.95	0.30
LightGBM	**94.68%**	**94.69%**	**94.67%**	**94.64%**	14.47	0.18
GRU	89.73%	89.71%	89.88%	89.65%	136.93	0.00
GRU (ES)	89.80%	89.77%	89.78%	89.68%	195.58	0.00

Source: Muralidharan et al. (2025)

The results suggest that ensemble and gradient boosting models are the best in structured keystroke data. LightGBM was the most accurate at 94.68 percent with histogram-based learning which is capable of processing big data sets effectively (Muralidharan et al., 2025). Random Forest also scored well

with 93.36 percent accuracy rate, which proves its reputation as a robust classifier, which minimizes the overfitting through the combination of several decision trees. Comparatively, less complex models like Decision Trees had very low scores of 71.49 percent indicating that they cannot capture complex and nonlinear patterns which exist in typing behavior. The Support Vector Machines were fast to train but achieved only 84.85 percent accuracy which indicates that they are not able to model the high dimensionality of the modern behavioral data.

These results highlight the need for more advanced methods in the next stage of keystroke authentication research. Although gradient boosting methods are powerful, they still depend heavily on manually crafted features and traditional supervised learning. To achieve even higher performance and support capabilities like one shot learning, where a user can be verified from a single sample, researchers are turning toward deep learning models such as Siamese Neural Networks, which can learn deep feature representations automatically without manual feature engineering.

2.2.2 Deep Learning Approaches

Conventional machine learning algorithms like the Random Forest and LightGBM can be used to work with structured data, but they tend to rely on handcrafted features. Such dependency restricts their capacity to be able to adjust to the natural, unpredictable variations of human behavior. Due to such limitations, researchers have resorted to Deep Learning more and more. Deep Learning is a subfield of machine learning involving layers of neural networks to learn high level patterns of data. In contrast to the conventional models that need to be configured to a certain set of specific characteristics such as dwell time, deep learning-based approaches can learn in-depth and nonlinear patterns directly through raw input (Budzys et al., 2025). This advantage is particularly applicable to behavioral biometrics, where subtle differences in typing behavior due to such factors as mood, fatigue or posture are hard to encode using fixed rules (Shadman et al., 2025).

In keystroke dynamics, Deep Learning models consider typing data as a sequence of data instead of a fixed collection of numbers. Convolutional Neural Networks and Recurrent Neural Networks, and LSTM models in particular, have gained popularity due to their ability to learn how typing patterns change with time. According to Shrivastava and Bollavarapu (2025), the models are useful in identifying the natural rhythm of typing of a user. CNNs are capable of identifying short and repeated timing pattern sequences, whereas LSTMs are able to retain long term dependencies, which will assist the system distinguish between the natural pauses of a typical user and the unnatural hesitation of an imposter (Muralidharan et al., 2025).

Nevertheless, despite their strength, deep learning models tend to be costly to use since they typically demand a vast amount of training data per user, which is impractical in real authentication settings where a new user might only be able to supply only a few samples. In order to deal with this obstacle, scientists have studied metric learning methods, which emphasize the similarity rather than classification of the users. The most prominent of these models is the Siamese Neural Network. Instead of acquiring certain characteristics of individual users, SNNs acquire the ability to compute the eruption of two typing samples, which is why they can be used to verify identity with extremely small amounts of data (Fide and Anarim, 2025).

2.2.3 Siamese Neural Network

Despite the strong level of accuracy that deep learning models can have, they typically need a significant amount of training data per user, which is not practical in a real authentication setting where users may only be able to provide a small number of samples. In order to reduce this shortcoming, researchers have tried to investigate metric learning methods and the Siamese Neural Network is one of the most successful. An SNN is constructed as demonstrated in Figure 2.2 with two identical sub networks sharing the same weights. Those subnetworks accept two inputs simultaneously and calculate the similarity between them instead of a class label prediction (Fide and Anarim, 2025). The model will be used to compare the current typing sample

of a user with the reference sample of his or her stored sample during authentication to determine whether the current and reference samples belong to the same person. The training is done with the help of Triplet Loss method that includes three samples. The Positive and Negative are other samples of the same user and the Positive and Negative are other samples of a different user respectively. The network trains itself by making the Anchor nearer to the Positive and further to the Negative, creating a feature space in which real users naturally cluster around whereas imposters are pushed away. This learning characteristic renders SNNs applicable in a situation where there is a limited user data.

A key issue with the use of SNNs in learning keystroke dynamics is that passwords may vary in length and create feature vectors of varying sizes that the standard neural networks are unable to work with. Budzys et al. (2025) discussed this by suggesting a data fusion and interpolation algorithm, which normalizes all keystroke patterns to a fixed length. They experimented to find that linear interpolation was the best method of doing this and still preserving significant timing patterns. After standardizing the data, the time series signals are then transformed into the two-dimensional images by the GAFMAT method and the SNN is then able to process typing behavior as a visual pattern. This enables the Convolutional Neural Network branches to capture more spatial information that cannot be observed in raw number form. This method was confirmed by large scale testing, in which mixture of datasets and exclusion of unusually long samples of passwords yielded the best results, with an Equal Error Rate of 0.1328. This illustrates the fact that SNNs, together with due preprocessing, could provide high performance in authentication with high accuracy and reliability.

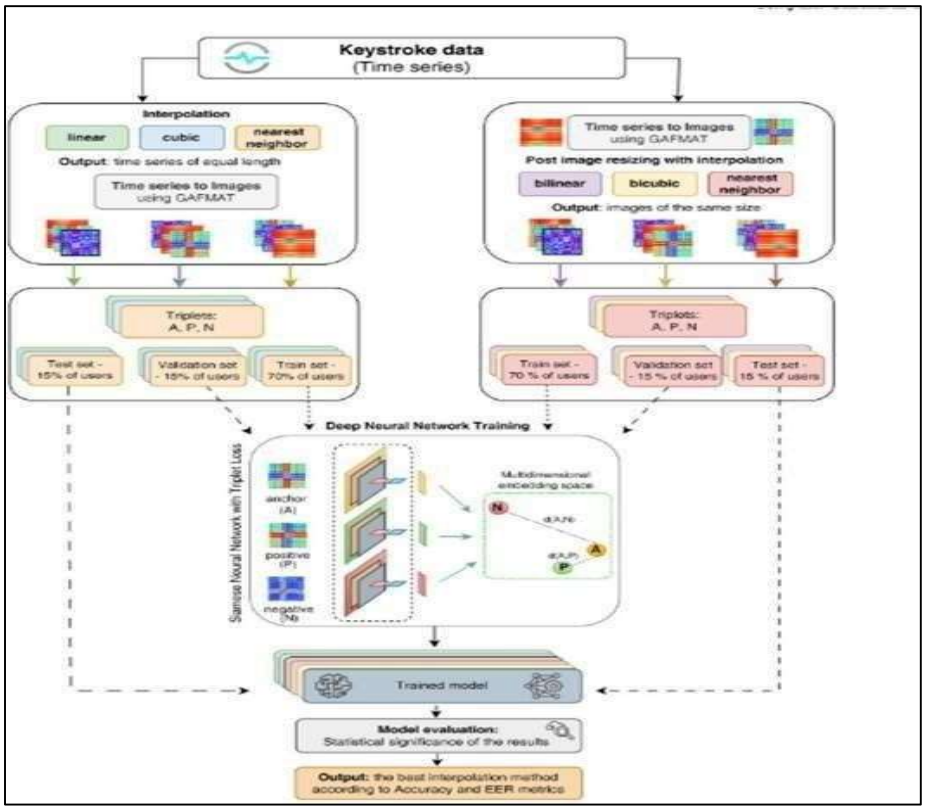

Figure 2.2 Flowchart for selecting interpolation methods to unify keystroke dynamics data (Budžys et al., 2025).

After the sequences of keystroke have been standardized to a fixed size, the data is passed through a more rigorous processing pipeline that is supposed to generate meaningful behavioral features. This whole workflow is shown in Figure 2.3. The former converts the one-dimensional time series signals to two dimensional images through GAFMAT technique. This conversion is significant as it converts numerical timing values in simple numbers into visual patterns, enabling the branches of the Convolutional Neural Network to identify finer details about the spatial information, which would have been hard to discover through simple numbers by themselves. The images are then fed into the Siamese Neural Network that is trained with Triplet Loss. As depicted in the figure, the model learns three samples simultaneously, that is, the Anchor, the Positive of the same user, and the Negative of the different user. In training, the network changes its internal structure such that the Anchor gets closer to the Positive and further away in the learned embedding space than the Negative. The outcome of such a process is a distinct division

between true users and fake ones which form separate clusters that facilitate proper and sound behavioral authentication.

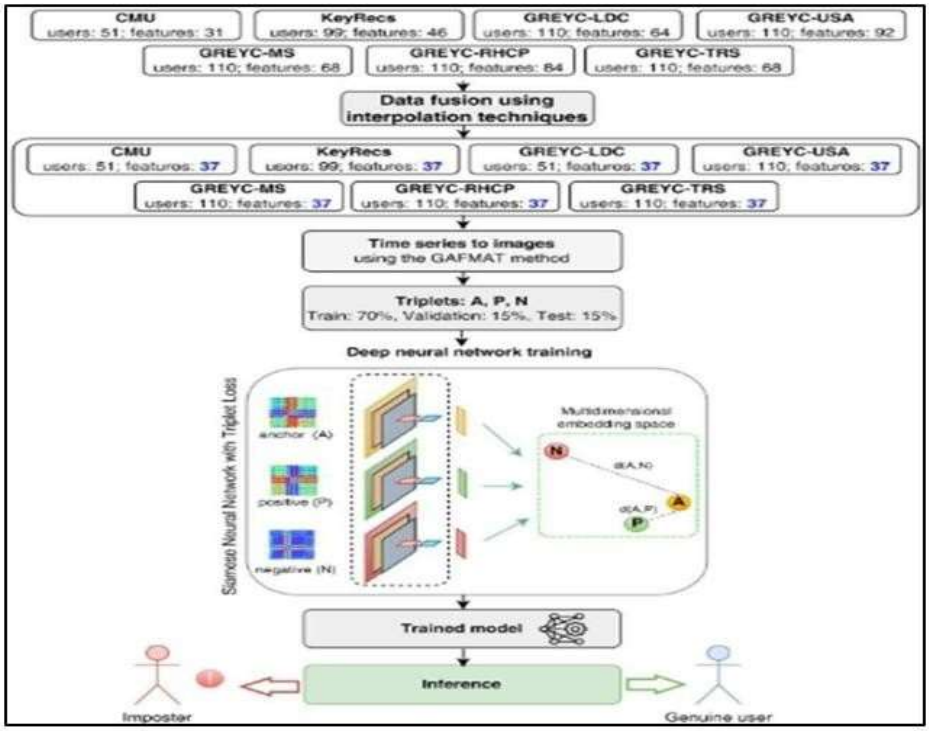

Figure 2.3 Methodology for data fusion-based authentication using complex keystroke dynamics analysis
(Source: Budžys et al., 2025).

The performance of this data fusion approach combined with the SNN architecture was confirmed through extensive experiments using multiple fused datasets. As reported in Table 2.2, the best results were obtained when the datasets were merged and specific long password samples were removed, a configuration identified as Fused Data 3. Under this setup, the model reached an Equal Error Rate of 0.1328, indicating that the integration of linear interpolation with a CNN enhanced Siamese Network offers strong reliability and consistency across varied user typing behaviors.

Table 2.2 Performance of Data Fusion Strategies in SNN Authentication

Dataset Strategy	Best EER	Mean EER	Analysis
Fused Data 3 (Optimized Fusion)	**0.1328**	**0.1642**	Lowest error rate; best generalization to unseen users.
Fused Data 2 (Partial Fusion)	0.1562	0.2031	Improved performance by removing specific long passwords.
Fused Data 1 (Full Fusion)	0.1875	0.2265	Baseline performance with all password lengths included.

Source: Budžys et al. (2025)

2.2.4 Supervised Learning

Many key stroke dynamics methods rely on supervised learning, in which models are trained on labeled data that are decisive on a genuine and imposter behavior. Here, the algorithm will be trained to predict a user identity using the keystroke features to a desired loss function minimization (Shadman et al., 2025). The key benefit of it is the possibility to have definite decision boundaries, assuming that adequate labeled data is present to train it. The Support Vector machine and the Random Forest are common supervised learning methods applied in this field. Shobha et al. (2025) indicate that SVMs are appropriate in binary classification as they determine the ideal boundary separating typing pattern of a legitimate user and an imposter. Random Forest models, in their turn, are decision trees that are grouped together to better predict the data and minimize overfitting, which is why they are especially effective when working with the variability and noise of behavioral data (Muralidharan et al., 2025).

Although useful, traditional supervised learning methods have significant scalability challenges when used in real-world applications. Some of the models like the SVMs are closed set based and thus fail to identify the users who were not part of the original training data unless the model is re-trained altogether. Moreover, these classifiers are dependent on high volumes of marked instances and thus, numerous authentic and deceiver examples are necessary to assist every user to shape a stable choice boundary. This demandingness is not realistic when new users are often introduced into the system (Budzys et al., 2025). Due to these shortcomings, current studies have turned to Metric Learning, which is a more adaptable form of supervised learning that attempts to address these limitations.

I. Metrics Learning

Many key stroke dynamics methods rely on supervised learning, in which models are trained on labeled data that are decisive on a genuine and imposter

behavior. Here, the algorithm will be trained to predict a user identity using the keystroke features to a desired loss function minimization (Shadman et al., 2025). The key benefit of it is the possibility to have definite decision boundaries, assuming that adequate labeled data is present to train it. The Support Vector machine and the Random Forest are common supervised learning methods applied in this field. Shobha et al. (2025) indicate that SVMs are appropriate in binary classification as they determine the ideal boundary separating typing pattern of a legitimate user and an imposter. Random Forest models, in their turn, are decision trees that are grouped together to better predict the data and minimize overfitting, which is why they are especially effective when working with the variability and noise of behavioral data (Muralidharan et al., 2025).

Despite their usefulness, traditional supervised learning methods encounter major scalability issues when applied in real-world settings. Models such as SVMs operate under closed set assumptions, which means they struggle to identify users who were not included in the original training data unless the model is retrained entirely. In addition, these classifiers rely on large amounts of labeled examples, requiring numerous genuine and imposter samples for each user to form a dependable decision boundary. This requirement becomes unrealistic in environments where new users frequently join the system (Budžys et al., 2025). Because of these limitations, recent research has shifted toward Metric Learning, a more flexible branch of supervised learning designed to overcome these constraints.

2.2.5 Evaluation Metrics

To evaluate the performance and reliability of biometric authentication systems, researchers rely on a well-established set of metrics. These metrics provide a structured way to assess both the security strength and the usability of a system. As noted by Shadman et al. (2025), choosing the right metric is important because different applications place emphasis on different priorities. High security environments aim to minimize unauthorized access,

whereas consumer applications often focus on reducing inconvenience for legitimate users. Two of the most essential measures are the False Acceptance Rate and the False Rejection Rate. FAR reflects the system's security risk by indicating how often imposters are incorrectly granted access. A low FAR is crucial for applications where unauthorized entry would have serious consequences. FRR, on the other hand, measures usability by showing how often genuine users are mistakenly denied access. A high FRR can create frustration and disrupt workflow, as legitimate users may need to repeatedly reauthenticate.

Researchers also use the Equal Error Rate to understand the balance between FAR and FRR. The EER represents the point at which both error rates are equal. A lower EER suggests that the system achieves a stronger balance between security and usability, meaning it can accurately differentiate between genuine users and imposters without being overly strict or too lenient (Budžys et al., 2025). Beyond error rates, metrics such as Accuracy and Standard Deviation help provide a broader picture of system performance. Accuracy indicates the percentage of correctly classified samples, offering an overall performance measure (Muralidharan et al., 2025). Standard Deviation reflects how consistent the model's performance is across different users or evaluation rounds. A low value suggests that the system performs reliably for most users rather than excelling for some and failing for others (Muralidharan et al., 2025).

2.2.6 Cybersecurity

The state of cybersecurity has moved to a point where the knowledge-based authentication is no longer enough, and the sphere itself moves towards more dynamic and behavior-based security solutions. Behavioral biometrics, particularly the keystroke dynamics, provide a viable solution to this change by allowing systems to constantly assess user identity and the possible threat instead of depending on a single act of entering the system (Azmat, 2025). This shift is a significant shift in both authentication and authorization

models, which are concerned with who is the user, and what the user is allowed to do respectively.

I. Authentication Models

Authentication systems are created to confirm that actually a user is who he claims to be and the recent studies have gone much beyond password check to adopt a more dynamic multi layered model. The authentication factors can be broadly classified into three categories, including something the user knows (a password), something the user has (a token), and something the user is (a biometric trait) (Ibrahim Kamba and Dauda, 2025). Conventional static authentication is based on one verification action at the time of the log in (Gilbert and Gilbert, 2025). This approach has a fundamental flaw of the exposure time problem wherein the system will still accept the user after login without any additional authentication. In this time, an attacker may hijack the session or remotely access the device and the system has no system to identify that the user has changed. Even passwords, which are considered to be static, are highly vulnerable to phishing, credential theft, and social engineering.

Continuous Authentication is a more developed and alternative method where the user is authenticated on a continuous basis during the session (Azmat, 2025). It is in line with the principles of the Zero Trust security approach because it makes sure that the system does not presume further authenticity but reconsiders the user on a regular basis. This model functions by examining live behavioral clues, such as keystroke dynamics, mouse movements and touch gestures. In a case where the user acts in a manner that is much different as compared to the profile, the system may request them to reauthenticate, limit them, or issue a security warning (Gilbert and Gilbert, 2025). Continuous authentication is very effective in post login attacks prevention, as it allows detecting anomalies in real time. In addition to this, Multi Factor Authentication enhances initial access control, which demands multiple independent verification factors (Ibrahim Kamba and Dauda, 2025). Behavioral biometrics complement MFA through a passive and hard to

replicate something you are element (Azmat, 2025). The existing evidence demonstrates that MFA is effective in preventing such threats as phishing and credential stuffing when used together with behavioral authentication.

2.3 Comparison of Existing Systems

The existing user verification solutions can be broadly divided into three major categories which represent the various phases of digital security evolution. The former is the category of traditional password-based systems, which are based on static, knowledge-based credentials and are still prevalent in many applications despite the documented vulnerabilities (Gilbert and Gilbert, 2025). The second category is characterized by AI-based continuous authentication systems based on supervised machine learning models e.g. Support Vector Machines which monitors user actions in real-time and identifies anomalies (Shobha et al., 2025). The third type is the digital competency assessment platforms, which use behavioral biometrics not to verify identity only, but to assess the cognitive state or proficiency of the user in the process of online interaction (Valacich et al., 2025). Despite the valuable capabilities that each of these categories offers, when considering the underlying architecture of these systems, none of them can be claimed to meet the needs of an adaptive, continuous, zero trust security framework.

I. Traditional Password-Based Authentication System

The majority of the digital platforms rely on the authentication method based on a simple password, and they follow a simple gatekeeper model in which a user cannot be granted access unless entering a correct secret string at the beginning of the session (Tharun and Sangeetha, 2025). This is the simplest type of Knowledge Based Authentication. These systems are popular since they can be implemented with a lot of ease and they do not need a lot of resources as indicated in Table 2.3. Their inherent security design, however, is less and less in line with the more complex and sophisticated threat environment of today.

Table 2.3 Advantages and Disadvantages of Traditional Password-Based Authentication

Advantages	Disadvantages
Requires no specialized hardware or sensors to implement, relying only on standard input devices (Tharun & Sangeetha, 2025).	Authenticates identity only once at login, creating an "exposure time" where the session remains open to hijacking if the user steps away (Gilbert & Gilbert, 2025).
Can be deployed instantly across any platform or operating system without requiring complex backend processing or user training (Tharun & Sangeetha, 2025).	Highly susceptible to theft via phishing, social engineering, brute- force attacks, and credential stuffing since it verifies only "what the user knows" (Shobha et al., 2025; Azmat, 2025).
Remains the most widely understood and accepted method of access control for general users (Hasan et al., 2025).	Cannot distinguish between the legitimate user and an attacker who possesses the correct credentials, lacking any mechanism to verify "who" is actually typing (Azmat, 2025).

Source: Tharun & Sangeetha (2025), Gilbert & Gilbert (2025), and Shobha et al. (2025).

The recent research is in agreement that password-based authentication cannot be applied in high stakes security context. The most severe weakness of it is the exposure time vulnerability as noted by Gilbert and Gilbert (2025). Once the initial log-in is established, the system is no longer used to check the identity of the user; but will assume that all the further operations are carried out by the authorized user. This poses a great security risk since an attacker can easily hijack an unattended and unlocked session without being detected. Also, password-based systems do not have a protection against the theft of credentials as they only authenticate what the user knows and not who the user is. In case an attacker obtains the password, he or she is provided with the same privilege of access as the authorized user (Shobha et al., 2025).

Though the framework proposed by Budzys et al. (2025) is very efficient in the management of the inputs of different length, it is as a matter of fact a fixed verification system. The methodology is concerned with authenticating users based on fixed text passwords, which implies that verification of identity is only performed at one point of entry with a short credential. Consequently, although the SNN model is technically powerful, its

application in this respect does not solve the problem of exposure time. Once the user has been authenticated, the system does not monitor the user, and the active session is prone to being taken over. This weakness highlights the necessity of continuous authentication systems that are not limited to one-time authentication and that continuously verify behavioral authenticity during the session.

II. Supervised Learning Models

A major midpoint in the development of digital security was the implementation of supervised learning classifier like Support Vector Machines and Random Forest into keystroke dynamics. These methods represented a significant step towards non-intrusive authentication by leaving behind the knowledge- based credentials. An example of such system is that suggested by Shobha et al. (2025), which includes an SVM classifier to a banking platform to investigate the behavior of real time typing. This kind of system as depicted in Figure 2.4 depends on the central server to process the behavior data. The mechanism is initiated by a Keystroke Input Module in the user device that captures crude timing data. This information is then sent safely to the server whereby a Keystroke Dynamics Analysis module is used to extract features like dwell time and flight time. The features are extracted and sent over to the machine learning model that compares the current session with the profile of a user. In case of abnormal behavior, a warning or a block on the action is provided by the alert mechanism (Shobha et al., 2025).

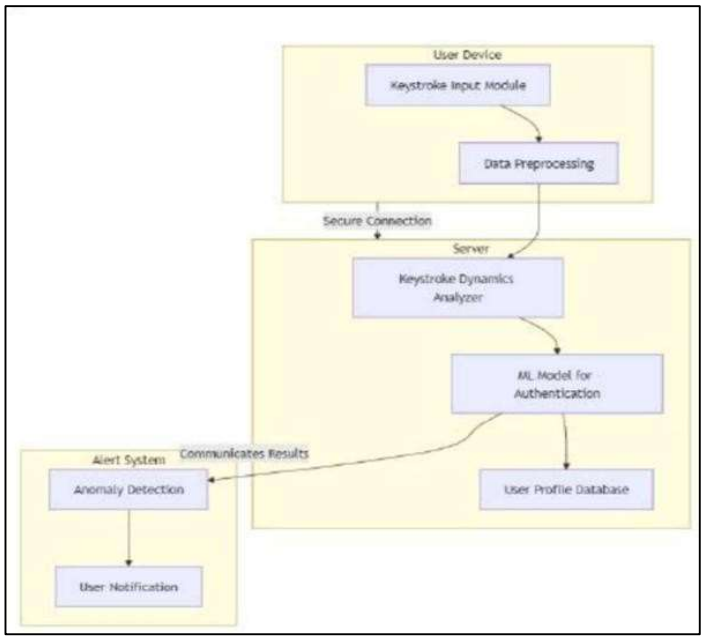

Figure 2.4 Architecture of an AI-Based Keystroke Authentication System using Supervised Learning
(Shobha et al., 2025).

These methods are more secure than conventional Knowledge Based Authentication and prove that the dynamics of keystroke can be used as an effective biometric characteristic (Shrivastava and Bollavarapu, 2025). This, however, has limitations, which limit the applicability of such solutions in real world environments. Muralidharan et al. (2025) report a comparative study that reveals that despite its reliability, standard SVM classifiers are typically unable to deal with the high dimensional patterns that are complex and common with modern behavioral data, which is effectively dealt with by Random Forest models. Their precision which is at 84.85 percent is not as high as more powerful gradient boosting or deep learning methods. Also, as Figure 2.5 shows such systems rely on a static database of user profiles where a large amount of labeled data is necessary on a per-user basis. This dependence is not scalable, as the model usually needs to be retrained to form new decision boundaries to enroll new users (Budzys et al., 2025).

III. Digital Competency Assessment Platforms

Another relevant group of applications can be seen in digital platforms used for remote assessment and competency evaluation, such as those found in

online learning systems or recruitment processes. Unlike traditional security tools, these platforms use behavioral data, including keystroke dynamics and mouse movements, not only to confirm identity but also to interpret a user's cognitive state and level of knowledge (Valacich et al., 2025). They operate on the idea that behavioral patterns can expose meaningful differences between a user who genuinely understands the material and one who may be relying on outside help or dishonest practices (Valacich et al., 2025). To identify these distinctions, the platforms extract detailed metrics from user interactions, as shown in Table 2.4 and Table 2.5.

Table 2.4 Key Features of Keystroke Dynamics

Category[b]	*Features*
Temporal measures	Dwell time, flight time, transition breaks
Error patterns	Backspace usage, correction behavior, hesitation
Special key usage	Function keys, shortcuts, command sequences
Language patterns	Word formation speed, consistent typing chunks

b. Adapted from [36]

Source: Adapted from Valacich et al. (2025)

Table 2.5 Key Features of Mouse Movements

Category[a]	*Features*
Temporal measures	Response time (pre and post), idle time, reaction time
Spatial movements	Distance, additional distance, maximum deviation, area under the curve (AUC), x- and y-flips, velocity, acceleration
Stimuli interactions	Clicks, sub-movements, scrolling, leaving the current page

a. Adapted from [33]

Source: Adapted from Valacich et al. (2025)

The strength of these systems comes from their ability to identify very subtle patterns of behavior that may signal hesitation or uncertainty. Valacich et al. (2025) note that certain actions, such as frequent switching between windows, repeated copying and pasting, or irregular mouse movements, can suggest that a user is searching for answers rather than recalling information from memory. This demonstrates how sensitive keystroke and interaction analysis can be in differentiating confident, authentic behavior from actions that may indicate dishonesty. By examining these micro level behaviors, such

platforms are able to produce a trust score or mark a session as suspicious, offering a depth of behavioral insight that goes beyond simple pass or fail authentication checks (Valacich et al., 2025).

However, these systems also come with clear limitations. Their architecture is primarily designed for after the fact evaluation rather than immediate access control (Valacich et al., 2025). In most cases, the output is a report or a flagged session produced once a task is finished, rather than an instant security response such as locking a session or restricting privileges. Additionally, the level of detail required to capture such fine-grained behavioral data can place significant demands on system resources. This challenge becomes even greater on mobile and modern interfaces, where accurate analysis requires tracking complex touchscreen interaction patterns, as shown in Table 2.6.

Table 2.6 Key Features of Touchscreen Interactions

Category[c]	*Features*
Gesture dynamics	Swipe velocity, pinch-zoom patterns, rotation smoothness
Pressure characteristics	Touch pressure variation, contact area changes
Multi-touch behaviors	Finger spacing, coordination patterns
Spatial accuracy	Touch precision, target acquisition efficiency
Orientation patterns	Device tilt angles, orientation changes over time

c. Adapted from [37, 38]

Source: Valacich et al. (2025)

This significant demand for detailed behavioral data makes the approach difficult to scale and limits its practicality as a universal, low-cost continuous security solution for entire operating systems or web applications (Valacich et al., 2025).

IV. Comparison of All System

Current authentication systems are evidently restricted to current security requirements. The conventional password-based systems operate on the basis

of fixed credentials only and offer no security post-authentication, which can be stolen and used to compromise the session (Gilbert and Gilbert, 2025). Machine learning models based on keystroke dynamics, e.g. Support Vector Machines and Random Forest, show that behavioral data can support verification, but are costly in terms of large labelled data sets, require fixed-text inputs and scale poorly when the behavior of users is varied or new users are introduced (Shobha et al., 2025; Muralidharan et al., 2025; Budzys et al., 2025). More recent deep learning models, like the Siamese Neural Network with GAFMAT\transformation, have a high accuracy and are capable of keystroke of variable length, but function as a one-time login verifier and do not monitor continuously (Budzys et al., 2025). Behavioral competency assessment systems are informative to the user but cannot be trusted to make real-time security decisions (Valacich et al., 2025). All of these restrictions show that it is evident that a more adaptive and ongoing authentication structure is required, which is summed up in Table 2.7 and is the primary driver of the creation of the proposed BioType system.

Table 2.7 Summary of Strength and Weakness in Existing Authentication Models

Model / Approach	Strengths	Weaknesses	Gap Leading to Proposed Model
Traditional Password-Based Authentication	Simple, widely deployed, low cost	Vulnerable to credential theft, no session monitoring, exposure time risk	Cannot ensure continuous identity verification after login
ML-Based Keystroke Authentication (SVM, RF)	Demonstrates feasibility of behavioral biometrics, faster than DL	Requires large labeled datasets, poor scalability, fixed-text input dependence	Cannot adapt to user variability, unsuitable for real-world continuous use
Budžys et al. (2025) SNN with GAFMAT	Strong accuracy, effective variable-length handling, robust embeddings	Static authentication only, heavy computation, no real-time capability, sensitive to long-password outliers	Cannot operate as continuous authentication, lacks adaptive learning and risk scoring
Competency Assessment Platforms using Behavioral Features	High-fidelity behavioral capture, detects nuanced behavior	Designed for retrospective analysis, resource-intensive, no immediate security action	Not suitable for real-time endpoint security or continuous monitoring

2.4 Justification of the Chosen Method, Technique and Features

In conclusion, the current authentication models, after consideration, the BioType system in this project is based on the Data Fusion and GAFMAT architecture suggested by Budzys et al. (2025). The method is chosen as it is resistant to critical shortcomings of conventional supervised learning strategies that need fixed input texts, extensive labelled data, and retraining on modifications in user behavior (Muralidharan et al., 2025). The chosen framework has three key strengths: good processing of variable length keystroke with data fusion, better feature extraction with image transformation and better generalization with metric learning. Linear interpolation enables any size keystroke sequence to be normalized without the loss of significant timing data, which is why the model is applicable in real world situations where users type dynamic and unpredictable text (Budzys et al., 2025; Shadman et al., 2025).

The system is also further enhanced by the integration of GAFMAT to transform time series data into two dimensional images, which can then be analyzed by Convolutional Neural Networks to identify deeper behavioral patterns that cannot be elicited by traditional handcrafted features (Shrivastava and Bollavarapu, 2025). This is an important level of analysis in identifying minor variations in genuine and impostor behavior. Lastly, the fact that a Siamese Neural Network is used supports One Shot Learning, allowing the system to authenticate users using few samples to enroll them, and no massive re-training is required when a new user is added (Fide and Anarim, 2025). This renders the architecture very scalable and appropriate to the ongoing alignment with the purpose of the project that is the generation of low friction, real time behavioral security layer.

2.5 Conclusion

This chapter has examined the shift from static, knowledge-based authentication to dynamic behavioral biometrics in response to modern

security threats. Traditional methods such as passwords and physiological biometrics are no longer sufficient because they can be easily compromised and do not provide continuous monitoring. Earlier keystroke dynamics systems using supervised learning models showed potential but were limited by fixed text inputs and the need for large labeled datasets. To address these limitations, this research adopts Siamese Neural Networks with data fusion, which supports continuous authentication by converting time series data into visual patterns through GAFMAT and applying metric learning. This approach enables reliable user verification with minimal samples and without specialized hardware, allowing the proposed BioType system to offer a real time security layer that adapts to user behavior beyond one time authentication.

CHAPTER 3

METHODOLOGY

This chapter describes the methodology and system architecture of the proposed BioType continuous authentication system based on keystroke dynamics. The purpose of this chapter is to explain how the system is designed, developed, and implemented to extend an existing static authentication model into a continuous authentication framework. The chapter begins by introducing the selected project methodology and justifying its suitability for the nature of the BioType system. This is followed by a structured explanation of how the chosen methodology is applied throughout the development process. The system architecture is then presented to illustrate the flow of data and interactions between system components involved in continuous authentication. In addition, this chapter outlines the required hardware and software components used to develop and evaluate the proposed system. Finally, the chapter concludes with a summary of the methodological approach and architectural design adopted for the project.

3.1 Methodology

The approach to the design and implementation of the proposed BioType continuous authentication system in this project is an iterative approach to development. The iterative model focuses on refinement of the system by development cycles which are repeated so that elements of the system can be optimized by the outcome of the evaluation and the behaviour of the system. The research methodology that is chosen to be used in this project is appropriate since the BioType is an expansion of a pre-existing deep learning-based authentication model into a new continuous authentication environment. The move to free text continuous monitoring with the replacement of static fixed text authentication brings in unpredictability to the behavior of the data, stability of features and reliability of decisions. The iterative development helps to achieve such conditions because in this way,

the system can be improved gradually with the understanding of intermediate results and validation results (Bansal and Ouda, 2024). Conversely, traditional linear approaches like Waterfall model demand that all the requirements of the system should be determined at the initial phases of the system development. This is more inappropriate in behavioral biometric systems, where typing patterns are inherently changed with time and model performance can be highly reliant on empirical tuning instead of specifications (Shende et al., 2025). Although flexible, agile techniques are often team-focused and with high stakeholder contact, which does not apply to individual research with an established academic scope led Final Year Project. Thus, the iterative methodology offers a moderate framework that allows testing the experiment and at the same time control its refinement and keep the phases of development clear and consistent with the project goals. The overall iterative project development process is shown in the following diagram. Figure 3.1 is a reflection of the general cyclic procedure that entails the stages of planning, evaluation, testing, and deployment, illustrating how a certain stage leads to another.

Thus, the iterative methodology offers a moderate framework that allows testing the experiment and at the same time control its refinement and keep the phases of development clear and consistent with the project goals. The overall iterative project development process is shown in the following diagram. Figure 3.1 is a reflection of the general cyclic procedure that entails the stages of planning, evaluation, testing, and deployment, illustrating how a certain stage leads to another.

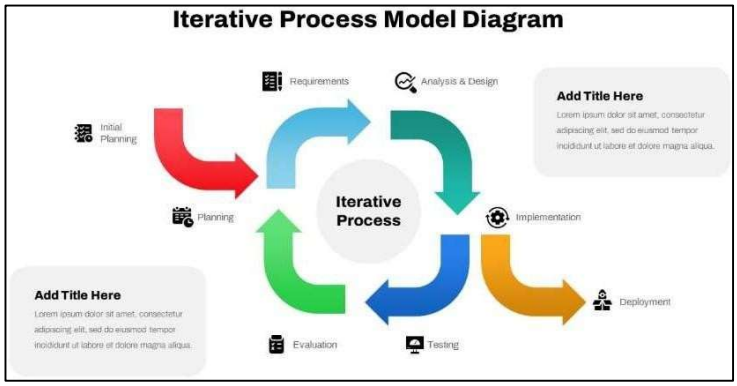

Figure 3.1 General Iterative Development Process

3.1.1 Iterative Development Methodology

Iterative development is a software development cycle where a system is developed using a repetitive cycle with each cycle resulting in a better system. Development is made in a series of small steps, rather than working on the whole system sequentially, and thus, some partial implementation can be tested, reviewed and improved, and then the next phase begins. This method is especially appropriate in systems where there is a complex behavior of data and model driven decision making. There are usually requirement analysis, implementation, evaluation, and refinement within each development cycle of an iterative methodology. The output of one loop is the input in the next and this allows the system parts to keep getting better as time goes by. Such a design enables the early detection of flaws in the design and enables modifications to be done before the system achieves its final shape (Bansal and Ouda, 2024).

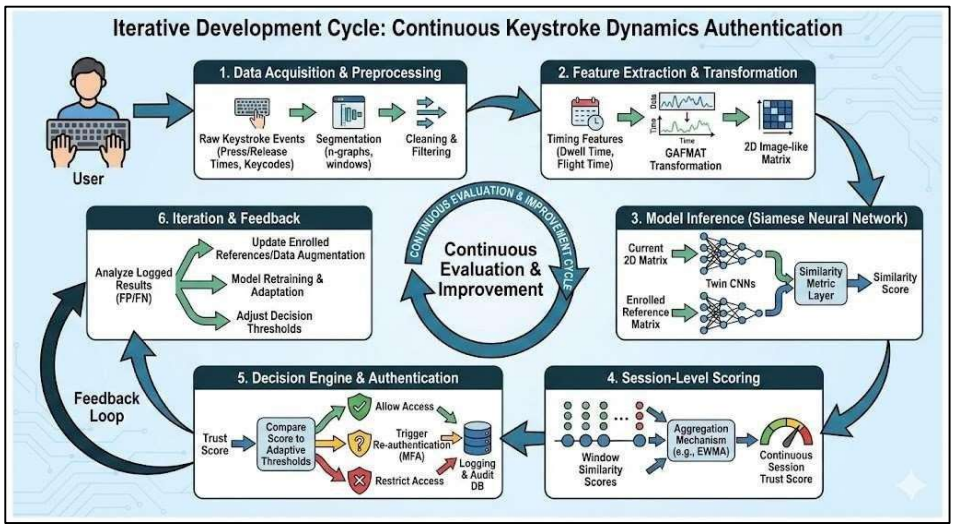

Figure 3.2 Iterative Development Cycle for Continuous Keystroke Dynamic Authentication

The development cycle as shown in the diagram is an excellent way of showing how the BioType system is developed over time through successive cycles of improvement. The features are extracted and inferred and the model inferred in each step of the cycle, which is enhanced in the next step. This enables the system to constantly adjust and use the feedback of the last cycle

and resulting in improved accuracy and performance of the system with each cycle. This iterative approach in the development process makes the system undergo a continuous review and improvement on the outcome with respect to real-world performance. This process of constant review and enhancement allows the BioType system to be flexible, as its functionality grows and becomes more stable with the acquisition of new information and new knowledge.

Repeated testing and validation are a major feature of iterative development. The components of the system are tested after every iteration to determine the level of performance, reliability and compliance to project goals. The results of the experiment or observations made on the system are then used in obtaining feedback which is then used to make further refinements. This will minimize chances of design errors not being identified until the last phases of development (Shende et al., 2025). Iterative development is also common in data driven and intelligent systems, in which the performance of the model cannot be completely determined during the initial design phase. In the case of such systems, empirical analysis is very instrumental in making architectural choices and parameter optimization. Iterative development offers a structured but flexible model of developing adaptive systems, which adapt to observed behavior and validation results through supporting gradual refinement and controlled experimentation (Bansal and Ouda, 2024).

3.1.2 Application of Iterative Methodology to BioType

Under the proposed project, the iterative development methodology is used, as the baseline keystroke dynamics authentication model is gradually extended into a continuous authentication system. Both iterations are aimed at optimizing particular system elements without changing the key architectural and modeling choices that were made in Chapter 2. This systematic development enables the system to develop by transforming a statical fixed text authentication model to a session based continuous authentication architecture by the means of controlled and measurable

enhancements. The BioType system is built in multiple, instead of one, development cycles, unlike building the entire system within one development cycle. The new functionality of each iteration is evaluated, the behavior of the system is studied, and previous design decisions are adjusted according to the experiment results. It is especially applicable to the behavioral biometric systems, where typing patterns are variable and the model performance should be tested and corrected empirically (Bansal and Ouda, 2024). Table 3.1 is a summary of the key development iterations that were undertaken in this project, their major activities, techniques and tools applied and the deliverables of each stage.

Table 3.1 Iterative Development Stages for the BioType System

Iteration	Main Activities	Techniques / Software Used	Deliverables
Iteration 1	Replication of baseline static authenticatio n model based on Budžys et al.	Python, NumPy, SciPy, TensorFlow, Siamese Neural Network, GAFMAT transformation	Reproduced static keystroke authentication model with fixed text input
Iteration 2	Extension of keystroke data collection from fixed text to free text typing	Python, keystroke logging module, timestamp-based event capture	Raw free text keystroke event dataset suitable for continuous input
Iteration 3	Design and implementation of session segmentatio n using sliding windows	Python, NumPy, sliding window mechanism	Windowed keystroke samples representing continuous typing sessions
Iteration 4	Preprocessi ng and standardizat ion of variable length keystroke windows	SciPy interpolation, NumPy data fusion operations	Interpolated and fused keystroke feature matrices with uniform length

Table 3.1 (Continued)

Iteration	Main Activities	Techniques / Software Used	Deliverables
Iteration 5	Feature transformat ion using GAFMAT representati on	Python, GAFMAT algorithm	Image based keystroke representations for deep learning input
Iteration 6	Siamese Neural Network training for similarity-based authentication	TensorFlow, Keras, triplet loss function	Trained Siamese model capable of measuring typing similarity
Iteration 7	Design of session level similarity aggregation and scoring mechanism	Python, similarity score aggregation logic	Continuous session level authentication scores
Iteration 8	Implementation of decision engine for continuous authentication	Threshold based decision logic, Python	Continuous authentication decisions including accept, warn, or reauthenticate

The different stages in the development process play a different role in modifying the initial static model of keystroke authentication to a complete continuous authentication system.

The initial version is aimed at the copying of the original model of a baseline of the static authentication scheme by Budzys et al. The step entails the rebuilding of the Siamese Neural Network, GAFMAT feature transformation, and the similarity-based authentication system based on fixed text input. It is necessary that this baseline is developed so that the original model performs properly before making any modifications. A solid ground is a stable basis on which all the other extensions are made. The second iteration also adds a free text typing behavior to the system which was in the fixed text input in the first iteration. Raw keystroke events are recorded during the process of natural typing as opposed to the use of predefined passwords. These are captured as key press and release sequences that have a time stamp, allowing the system to monitor behavioral patterns as the user continues to interact with the

system. This version is the most important step in removing the stagnant authentication and in favor of constant behavioral surveillance.

The third version provides the concept of session segmentation via the sliding window mechanisms. Streams of keystroke are divided into overlapping time-or-event-based windows. In the process, structured samples of keystroke are formed at the expense of temporal continuity across successive windows. Session sampling also makes sure that these windows are rightfully linked to the same active user session, which allows incremental authentication during system usage. The fourth iteration involves preprocessing and standardization of the segmented keystroke windows. Because of natural differences in typing rates and behavior, there can be a difference in the number of keystroke events on different windows. These variable length samples are normalized by using linear interpolation into fixed length representations. The operation of data fusion is then executed in a bid to incorporate timing features across windows in a consistent manner in accordance with the plan introduced in the baseline model but adjusting the same to the continuous input situations as outlined by Budzys et al. This step is necessary to make it compatible with the next feature transformation and deep learning steps.

The fifth version is concerned with feature transformation with GAFMAT technique. The standardized patterns of keystroke are transformed into two-dimensional image like matrices that maintain temporal relationships in the typing behavior. This modification enables time keystroke dynamics to be effectively handled by convolution based neural networks and does not alter the behavioral structure of the input data. The sixth version of the Siamese Neural Network is trained and used in similarity-based authentication. The model is trained to project the keystroke samples to a discriminative embedding space with shared weight branches and a triplet loss function. A comparison of similarity is done between the incoming keystroke windows and the enrolled user reference profiles. In comparison to the static authentication, similarity evaluation is repeated and conducted in multiple windows in the same session.

The seventh version presents session level scoring mechanisms. Aggregation of individual similarity scores across successive windows is done to generate a continuous trust score on the active session. The aggregation of scores makes them less sensitive to short-term variations and typing noise, and a more stable and consistent measure of user identity over time. The last version is the one that deploys the decision engine of the continuous authentication. Aggregated session scores are then used with threshold-based decision logic to decide how to respond to the system like grant further access, require reauthentication or limit the session. The decisions made based on the accumulated behavioral evidence instead of a single interaction are therefore used to make authentication decisions, which allow identity deviations to be detected in real time as long as the system is in use.

It is a structured iterative process of development through which the BioType system continuously builds on the initial fixed authentication model to create an ongoing authentication system. Every iteration within the process validates a particular component of the system prior to being integrated to guarantee the refining process and alignment to the project objectives whilst still being appropriate to be a Final Year Project of an undergraduate.

3.2 Summary of Project Methodology

This section summarizes the overall project methodology by mapping the iterative development process to the project objectives defined in Chapter 1. The purpose of this summary is to demonstrate how each development iteration contributes directly to achieving the intended goals of the BioType continuous authentication system. By organizing the methodology in a structured manner, the relationship between objectives, development activities, and system deliverables is made explicit. Table 3.2 presents an overview of the iterative methodology applied in this project, including the objectives addressed in each iteration, the main activities conducted, and the resulting deliverables.

Table 3.2 Summary of Project Methodology Based on Iterative Development

Project Objective	Iteration	Main Activities	Deliverables
Identify a suitable model to address the limitation of static authentication	Iteration 1	Review of existing keystroke dynamics systems, analysis of Budžys et al. baseline model, identification of limitations in static fixed text authentication	Finalized system concept and selection of Siamese Neural Network with data fusion as baseline
Develop a continuous authentication framework using keystroke dynamics	Iteration 2	Design of continuous authentication workflow, implementation of sliding window segmentation, session level monitoring strategy, and free text data handling	Continuous authentication framework design and updated system architecture
Implement preprocessing and feature transformation for continuous data	Iteration 3	Keystroke data preprocessing, linear interpolation for standardization, data fusion, and GAFMAT transformation	Preprocessed and transformed keystroke feature representations
Develop and integrate the deep learning authentication model	Iteration 4	Training and validation of Siamese Neural Network using continuous keystroke samples, similarity score computation	Trained SNN model and similarity scoring mechanism
Evaluate system performance and reliability	Iteration 5	System testing, performance evaluation using accuracy, FAR, FRR, and EER metrics, refinement based on results	Evaluated BioType prototype and performance analysis results

The iterative development methodology ensures that the BioType system evolves progressively while maintaining alignment with the project objectives outlined in Chapter 1. Each iteration focuses on a specific aspect of the system, allowing improvements to be made based on experimental results and system behavior. This structured refinement approach supports the development of a reliable continuous authentication system while managing the uncertainty associated with behavioral biometric data. By incrementally extending the baseline model and validating each component before proceeding to the next iteration, the methodology provides a clear and systematic pathway from problem identification to system evaluation.

3.3 System Architecture

The BioType system architecture is built to be in line with ongoing behavioral biometric authentication with keystroke dynamics. The architecture takes a fixed keystroke authentication model and transforms it in a real time monitoring framework by adding session-based processing, sliding window analysis and continuous decision making. The architectural layers are distinctly divided in order to provide modularity, scalability and simplicity in refining through iterative development. The overall system architecture of the proposed BioType continuous authentication system is shown in Figure 3.3 below. The architecture is structured as a pipeline that starts with the collection of raw keystroke data at the user device and goes through the preprocessing, feature transformation, model inference, session level scoring, and final decision making. Storage components are dedicated to model persistence, user profile management and security logging.

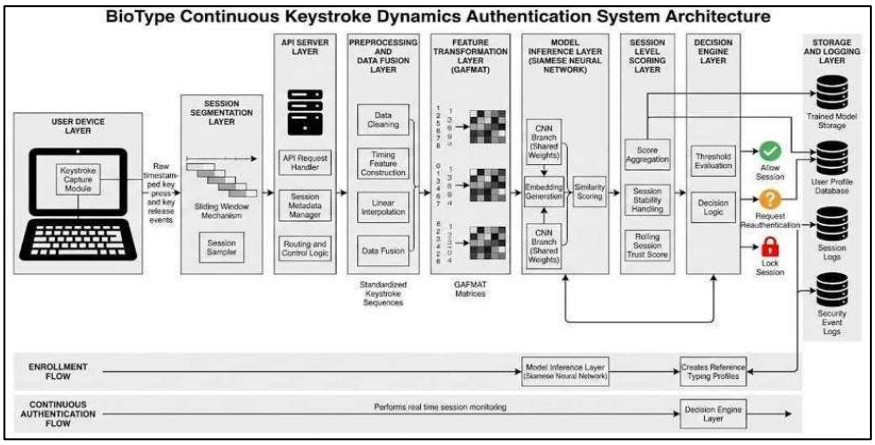

Figure 3.3 System Architecture of BioType: Behavioral Biometrics Authentication System using Keystroke Dynamics

To give a better insight on the functioning of the BioType system between the keystroke capture and the continuous authentication decision, the system architecture is further elaborated in three conceptual phases. In each phase, there are related system layers which are grouped together in terms of their functional roles and the kind of processing they undertake. This gradual mapping brings emphasis to transformation of raw keystroke input into behavioral evidence, similarity-based authentication result, and security decision making. Phase 1 deals with the data of behavior acquisition and structuring of the session where the raw events of keystroke are recorded and then arranged into structured windows. Phase 2 focuses on behavioral feature modelling and similarity inference where keystroke windows are converted and processed with deep learning. The phase 3 deals with ongoing trust assessment and security management whereby the session-level evidence is consolidated, authentication decisions are reached, and system records are kept. This is a well-organized presentation to enhance the clarity by explaining the contribution of every group of layers towards the entire continuous authentication process.

I. Behavioral Data Acquisition and Session Structuring

Phase 1 of BioType system architecture is concerned with the capture of the raw keystroke behavior of the user and its organization into systematic

samples that can be used in efficient authentication. The aim of this step is to make sure that the input of the keystroke is captured in a natural manner as the system conducts the interaction but the data is arranged in a structured manner that will be easily handled in subsequent stages. This layer consists of three layers closely related to each other, that is, user device layer, session segmentation layer, and API server layer, in which each layer fulfills a particular function in an overall flow of data between the user and the backend.

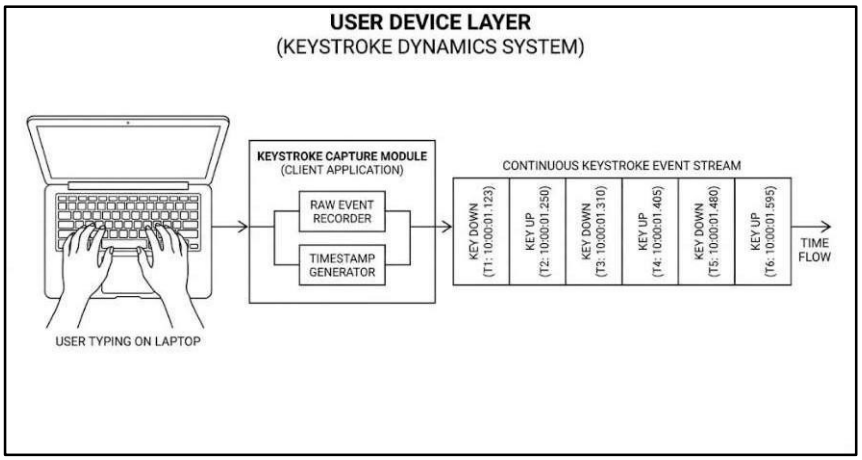

Figure 3.4 User Device Layer for Keystroke Event Capture

Figure 3.4 illustrates that it starts at the user device where key stroke information is recorded in a client-side keystroke capture module. As the user is typing on a standard physical keyboard, the system captures the raw keystroke events and records them as key press and key release events. These events are represented as low level inputs signals and not words or text meaning. The keystroke capture module works as an event listener, which will track every interaction with the keyboard and create an event record of every action. This is depicted in figure 3.1 whereby the internal client module has two critical functions and these functions are the raw event recorder and the timestamp generator. The raw event recorder captures the event of a keystroke occurrence and the timestamp generator gives a specific time value to an event. Consequently, the user device layer will result in an output a continuous event stream of key down and key up events whose timestamps are known. The significance of this design is that due to the continuous

authentication, the system needs to use natural behavioral cues instead of limited password entries, as well as enables the system to monitor the actual typing rhythm of the user without implementing authentication logic at the device level.

The timing information shown in Figure 3.4 is further clarified by Figure 3.5, which illustrates the temporal structure of keystroke events and explains why key press and key release timestamps are meaningful for behavioral biometrics. Figure 3.5 presents the relationship between two consecutive keys, Key A and Key B, and the event times labelled as t1 to t4. In this figure, t1 represents the moment when Key A is pressed down, and t2 represents the moment when Key A is released. Similarly, t3 represents the moment when Key B is pressed down, and t4 represents the moment when Key B is released. The figure uses these timestamps to visually define two common timing characteristics in keystroke dynamics. The first is dwell time, which refers to the duration a key is held down and is represented by the time interval between key down and key up for the same key, such as the interval from t1 to t2 for Key A. The second is flight time, which refers to the delay between consecutive keystrokes and is represented by the interval between events across keys, such as the time between the release of Key A and the press of Key B. The figure is not implying that these features are computed at the user device layer. Instead, it demonstrates that the raw event stream inherently contains the temporal relationships required for feature extraction later. This supports the rationale for capturing key down and key up events with precise timestamps, because behavioral patterns are formed through timing consistency across repeated actions.

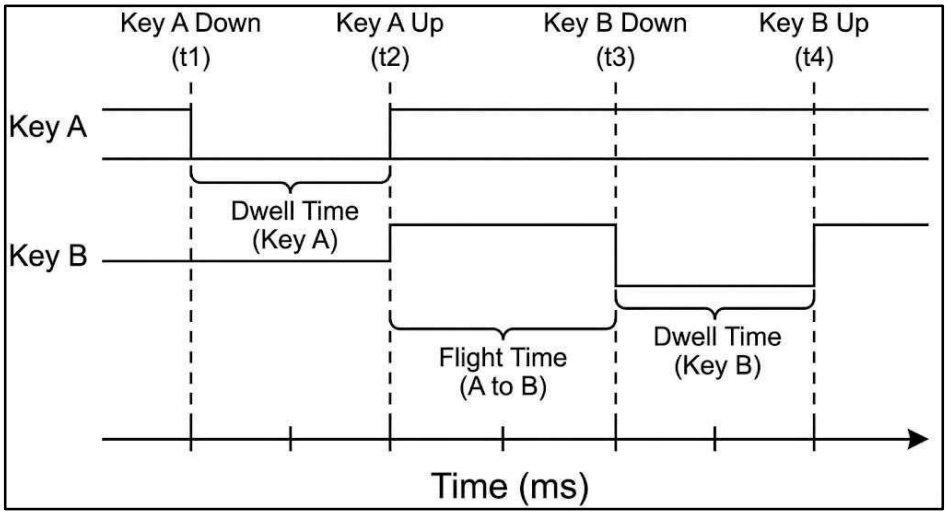

Figure 3.5 Keystroke Timing Features Derived from Key Press and Key Release Events

Although raw event capture is fundamental, continuous streaming input cannot be effectively sent out one event at a time and it cannot be analyzed effectively until enough behavioral evidence is gathered. This is why BioType has short term buffering within the user device to facilitate effective and stable sampling. Such a mechanism is depicted in Figure 3.6 where the key strokes on the keyboard are stored in a short-term buffer in the client-side environment. Each event of captured keystroke in the figure is denoted as a timed event and stored in temporary storage. The buffer is a buffer that gradually builds up events as the user keeps on typing. This buffering strategy minimizes communication overhead since this enables the system to send batches of events instead of sending individual keystroke. It also facilitates the non-intrusive data capture since the client is not bulky and its task is to gather and store raw events in temporary storage. The phrase lightweight client-side processing in Figure 3.6 reflects this architectural principle, where the device layer performs interrupt driven input capture and asynchronous output transmission, without performing heavy computation. Once enough events are collected, the buffered data becomes suitable for structured segmentation.

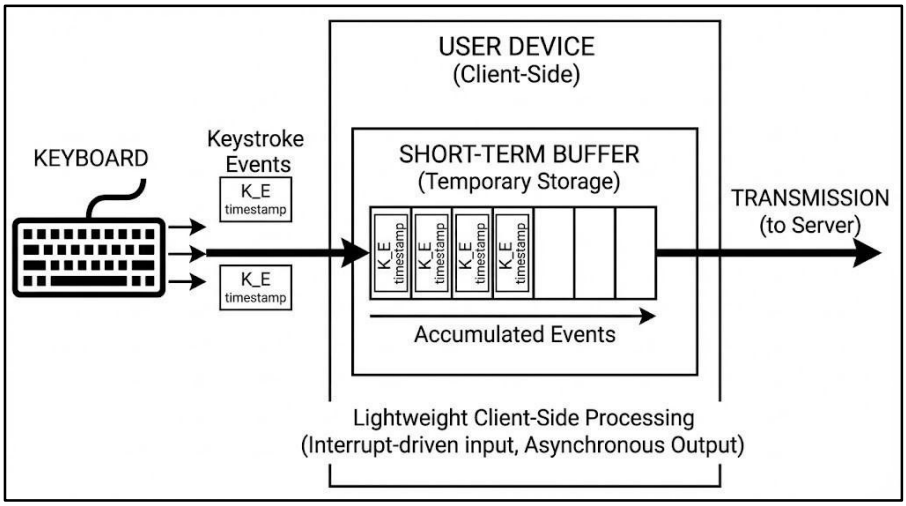

Figure 3.6 Client-Side Keystroke Buffering and Event Transmission Mechanism

Once the keystroke events have been buffered, the session segmentation layer divides the continuous event stream into uniform samples, with the use of sliding windows. The process is depicted in Figure 3.7 that demonstrates the process of dividing an ongoing series of keystroke events into overlapping windows. The continuous stream of keystroke events is given in 3.7, which are ordered events denoted by K1 to K12 and each is associated with a time stamp t1 to t12. This notation t1, t2 etc. does not mean dwell time or flight time, but the instant in time when each keystroke event is received. The rationale of displaying timestamps here is to show that events are time ordered and that segmentation does not compromise time continuity. The lower section of the figure indicates the sliding window segmentation process in which the stream is split into fixed length windows like Window 1, Window 2 and Window 3. The number of events in each window is defined, and windows are overlapping to provide continuity between samples. The shared area in the figure means that; certain keystroke events can be used in more than one window, and this can be useful in preventing authentication holes and may also help the system to scrutinize the behavior multiple times during an active session. The system is capable of constantly keeping identity track by building overlapping windows to ensure that the user does not have to restart typing or repeat certain text.

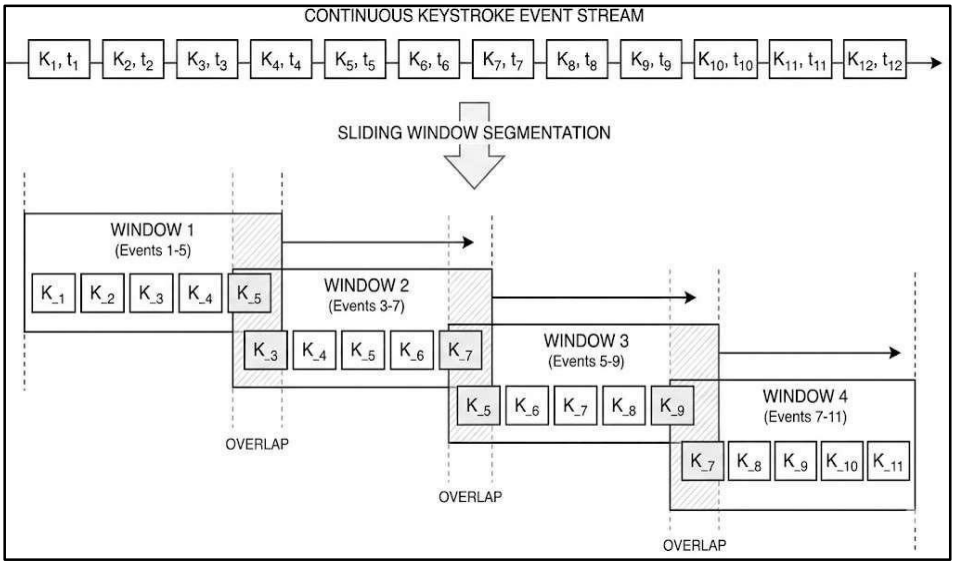

Figure 3.7 Sliding Window Segmentation of Continuous Keystroke Streams

After formation of the windows, they are structured samples of keystroke which can be sent to the backend using the API server layer. The API server allows to have a controlled interface allowing windowed keystroke data to be received, bound to the appropriate session context, and forwarded to the next processing pipeline. This guarantees that subsequent stages of the process like preprocessing, feature transformation and model inference do not receive unstructured streams as input but stable units. In general, Phase 1 provides a clean and trustworthy base on which the continuous authentication can proceed by making sure that the keystrokes are recorded in a natural manner, stored temporarily so as to be stabilized, sliced regularly in sliding windows as well as provided to the backend through a structured communication interface.

II Behavioral Feature Modeling and Similarity Inference

The BioType phase 2 system architecture is dedicated to converting structured keystroke windows into discriminative behavioral representations and to authentication through deep learning on similarity. Whereas Phase 1 deals with the capture and structuring of raw keystroke input, Phase 2 deals with the extraction of meaningful behavioral patterns in the data and is also concerned with the determination of how closely the observed typing

behavior and the profile of the enrolled user can be made to match. This step involves three layers closely related to each other and these are preprocessing and data fusion, feature transformation through GAFMAT, and model inference through a Siamese Neural Network. All these layers constitute the central analytical element of the continuous authentication mechanism.

Phase 2 has a processing flow starting with preprocessing and data fusion as shown in Figure 3.8. The number of timestamped keystroke events in each phase 1 segmented keystroke window varies with natural variations in typing speed and behavior on free-text input. These raw windows cannot be dealt with directly because deep learning models need the same input dimensions. The preprocessing pipeline is thus a set of processes to clean, standardize and structure the data. First, simple event filtering is used to eliminate unfinished or invalid keystroke records that can occur as a result of system interruptions or unnatural sequence of keystroke. After that timing characteristics are derived based on the raw key press and key release timestamps. These characteristics are dwell time which is the duration a key is held down and flight time which is the time relationship between successive keystrokes. These timing measures represent the basic elements of typing rhythm that are identified to be unique among people.

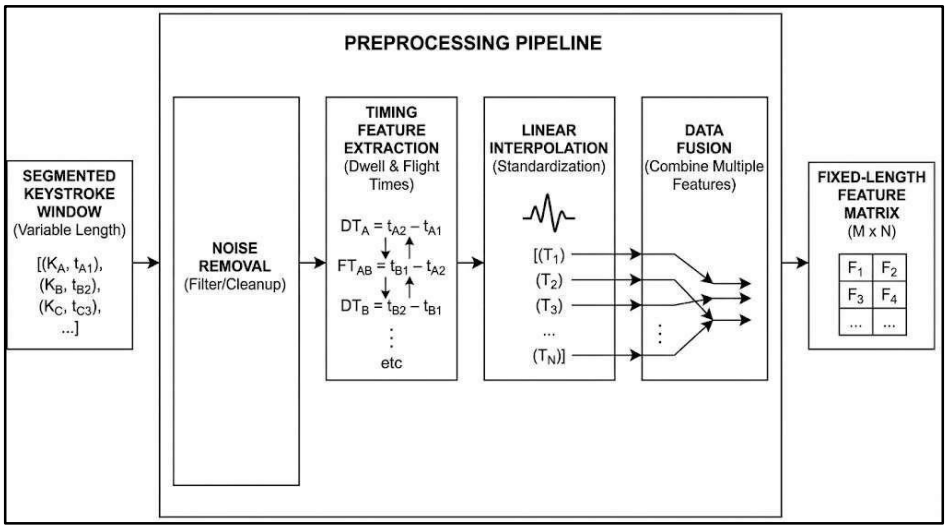

Figure 3.8 Preprocessing and Data Fusion Pipeline for Keystroke Windows

Since the natural length of free-text keystroke windows is not necessarily equal, linear interpolation is used to normalize each window to a uniform length sequence. This measure will make sure that the samples of keystroke will have a common temporal resolution, irrespective of the typing rate and the window writing. The system retains relative timing patterns while allowing a standardized downstream processing by mapping sequence of variable length features onto an equal scale. After the standardization, data fusion is done to unify two or more timing features into one solid representation. This combined representation combines complementary features of keystroke dynamics, and enables the system to obtain a richer behavioral profile, compared to an analysis based on the use of a single type of feature. The result of this step and presented on the right side of Figure 3.8 is a fixed-length feature matrix which is a stable and structured input to further transformation.

Once the preprocessing and the fusion of data done, the standardized keystroke features are converted into a 2-dimensional representation through the GAFMAT technique as depicted in Figure 3.9. At this step, the keystroke windows are represented by fixed length sequences of fused timing characteristics in terms of dwell time and flight time measurements. GAFMAT represents this one-dimensional temporal sequence as a two-dimensional matrix by modeling pairwise temporal relationships of the positions in the sequence. The temporal structure of the typing behavior can be maintained in a spatial form by each cell in the resulting matrix representing a functional relationship between two temporal points. The transformation turns the key strokes dynamics into an image like representation but preserving the ordering properties and dependency properties of the typing sequence.

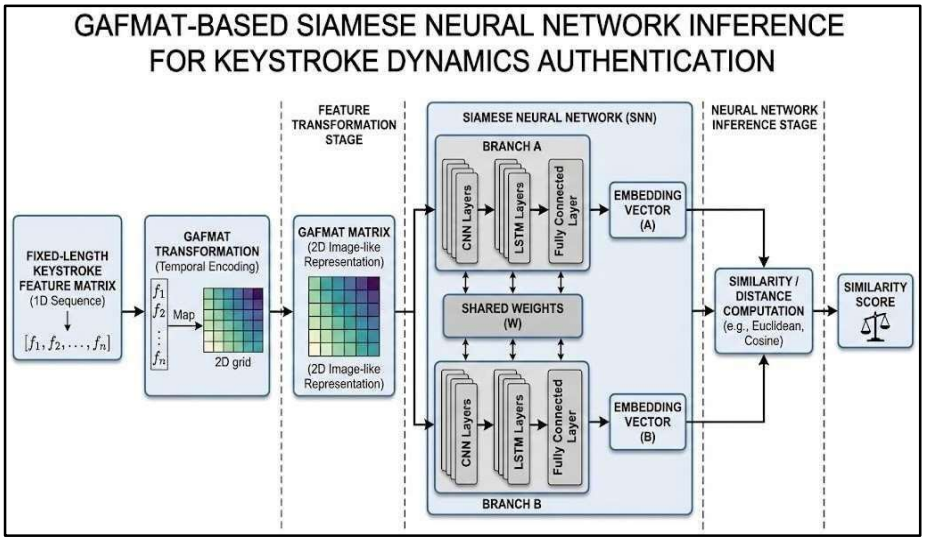

Figure 3.9 GAFMAT-Based Siamese Neural Network Inference for Keystroke Dynamics Authentication

The GAFMAT transformation is aimed at making deep learning architectures that process using convolution architecture effective. The system is computationally empowered, since it represents the dynamics of time as structured matrices, allowing the use of capabilities of spatial feature extraction without relinquishing the behavioral information contained in keystroke timing patterns. Figure 3.9, shows that the output of this step is a GAFMAT matrix, which is a standardized and expressive model of the typing behavior of the user, to be used in similarity-based learning.

After the feature transformation, the GAFMAT matrices are directly inputted into the model inference step during which similarity-based authentication is carried out by a Siamese Neural Network, as shown in Figure 3.9. The Siamese architecture has two neural network branches whose weights are shared, meaning that the two inputs are handled by the same logic of extracting features. In the BioType system, a branch is used to process the GAFMAT representation of the current keystroke window and another branch is used to process a reference GAFMAT representation that has been linked with the registered user. The branches encode their input in an embedding vector in a shared latent feature space.

The two branches have common parameters, which means that the generated embedding vectors can be directly compared. A similarity/distance metric is then used to estimate the level of correspondence between the typing behavior at hand and the user profile registered. This calculation gives a similarity score that is a quantitative measure of identity consistency within the specified window of keystroke. The closer the similarity score, the more it would be associated with the behavioral pattern of the enrolled user and the opposite also holds. Notably, the inference process is a window level process which does not yield a final authentication decision. Rather, it is always creating behavioral evidence using similarity scores.

Altogether, Phase 2 performs the vital role of transforming raw keystroke behavior into valuable similarity evidence by means of a systematic sequence of feature transformation and deep learning inference. This step will create a strong base of continuity authentication by encoding temporal dynamics with GAFMAT and similarity learning with a Siamese Neural Network. The window-level similarity scores that are generated during this stage are sent to Phase 3 where they are time-aggregated, time-stable and made to inform adaptive authentication decisions.

III Continuous Trust Evaluation, Decision Making, and Security Logging

Phase 3 of BioType system architecture is concerned with converting the similarity evidence at the window level down to stable authentication decisions and accountability in the system by providing structured storage and logging. Phase 2 yields similarity scores of individual keystroke windows that are inadequate to be used in effective on-going authentication as there is short-term variability of typing behavior. Phase 3 deals with this weakness by combining similarity evidence over time, analyzing session-based trust, and implementing security decisions in a controlled and dynamic way. Figure 3.10 depicts the entire process of the session level scoring, decision logic and storage management.

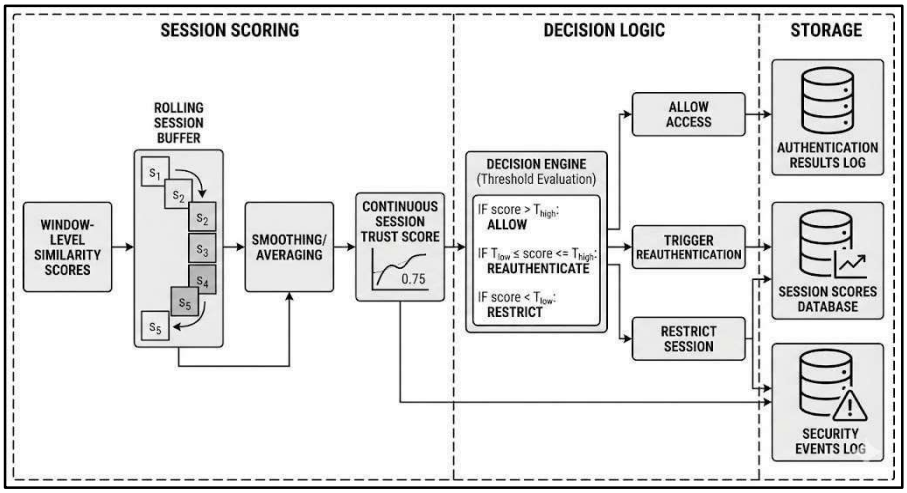

Figure 3.10 Session-Level Trust Evaluation, Decision Engine, and Logging for Continuous Authentication

It starts with the process of the session-level scoring mechanism as similarity scores obtained during successive keystroke windows are not regarded as final decisions but as behavioral evidence. According to Figure 3.10, every window-level similarity score is initially entered into a rolling session buffer which keeps a short history of the recent authentication evidence. This buffer enables the system to monitor typing behavior patterns in many windows rather than respond to individual deviations. To provide further stability, the buffered scores are smooth or averaged. The system can generate a continuous session trust score by making typing rhythm less sensitive to short-term fluctuations in typing noise, or temporary variations in typing rhythm, showing how much the system has confidence in the user being who they are at a given time.

Continuous session trust score is a dynamic score it changes with the processing of each new keystroke window. Instead of creating binary results, the score gives a progressive and explainable measure of identity stability during the active session. As shown in Figure 3.10, the trust score is continually updated and it is the main input into the decision logic part of the system. This design also has the advantage of ensuring that the authentication decision is made based on the cumulative behavioral evidence which is a major requirement of effective continuous authentication systems.

After calculating the session trust score, the decision engine uses the threshold values to evaluate it. The decision engine uses threshold-based reasoning to make the right system response. In cases when the trust score is beyond a high confidence level, the system will not interrupt a normal access. When the score lies within a middle range, the system can invoke a reauthentication procedure of determining the identity of the user by passing an extra challenge. When the trust score falls below a lower limit which is a major deviation of the enrolled behavioral profile, the system inhibits or ends the session. This educative level of decision-making strategy allows flexible security measures and reduces unwarranted interference with legitimate users.

Simultaneously with the decision making, the BioType system stores the appropriate authentication data using special storage and logging modules, as illustrated in Figure 3.10. The results of authentication, session level trust scores and security events are maintained in different repositories to aid system, performance evaluation, future analysis, and auditing. Significantly, these storage operations are not expected to depend on the real-time authentication flow so that logging does not cause a latency factor or disrupt the decision logic. The system helps in accountability by keeping organized logs of authentication activity and security reaction and facilitates continuous improvement and forensic examination.

In general, Phase 3 is the last stage in the endless authentication pipeline as it transforms similarity evidence into stable trust judgments and implements adaptive access control decisions, as well as records the entire system. The BioType system provides accountable, non-invasive and reliable continuous authentication with threshold-based decision logic, and structured logging by combining session- level scoring with threshold-based decision logic and structured logging. This step has the benefit of making sure that security decisions are not based on an individual interaction but on years of repetitive behavior patterns, which completes the essence of constant verification of users.

3.4 Hardware & System Requirement

This section describes the hardware and software requirements used to develop, implement, and evaluate the proposed BioType continuous authentication system. The selected requirements are chosen to ensure that the system remains practical, accessible, and suitable for deployment on standard computing platforms without the need for specialized hardware. Since BioType relies on behavioral biometric data derived from keyboard interactions, the system is designed to operate using commonly available devices and development tools.

3.4.1 Hardware Requirement

The hardware requirements for the BioType system are divided into two categories, namely hardware required by the end user and hardware required for system development and experimentation. This separation reflects the difference between data capture activities on the user side and computational processing tasks on the developer side.

Table 3.3 Hardware Requirements for End User

No	Hardware	Specification	Description
1	Keyboard	A standard physical QWERTY keyboard	To capture keystroke timing information such as key press and key release events accurately during normal typing activities.
2	Laptop or Desktop	A device with at least 4 GB RAM and a standard processor	To capture raw keystroke events and transmit them to the backend system without performing heavy computation on the user side.
3	Network Connection	A stable local or internet network connection	To enable continuous transmission of keystroke data to the backend system during an active authentication session.

The selected end user hardware components were chosen to ensure that the BioType system remains non-intrusive, accessible, and practical for real world use. A standard physical keyboard is required to accurately capture keystroke timing features such as key press and key release events, which form the basis of keystroke dynamics authentication. The use of a laptop or desktop computer with basic specifications is sufficient because no heavy computation is performed on the user side. All processing and authentication logic are handled by the backend system. A stable network connection is required to support continuous transmission of keystroke data during an active session. These hardware requirements ensure that continuous authentication can be performed transparently without disrupting normal user interaction, which aligns with the objective of behavioral biometric systems (Shende et al., 2025; Subash et al., 2026).

While the end user hardware focuses on keystroke data capture during normal system usage, additional hardware resources are required to support system development, experimentation, and evaluation. The development hardware is used to implement preprocessing procedures, perform feature transformation, train the deep learning model, and evaluate continuous authentication performance. Table 3.4 presents the hardware requirements used during the development of the BioType system.

Table 3.4 Hardware Requirements for System Development

No	Hardware	Specification	Description
1	Computer	A computer with at least 8 GB RAM and a multi core processor	To perform keystroke preprocessing, feature transformation, model training, and continuous authentication inference.
2	Graphics Processing Unit	Optional dedicated GPU	To accelerate Siamese Neural Network training and experimentation when available, though not mandatory for system development.

Table 3.4 (Continued)

No	Hardware	Specification	Description
3	Storage	Sufficient local storage	To store keystroke datasets, trained model parameters, user reference profiles, and authentication logs generated during development.

The developer hardware requirements were selected to provide adequate computational resources for building and evaluating the BioType continuous authentication system. Keystroke preprocessing, feature transformation, and Siamese Neural Network training require greater processing capability and memory compared to user side data capture. A computer with sufficient random- access memory and a multi core processor ensures efficient execution of these tasks during iterative development. While the use of a graphics processing unit can improve training efficiency, it is not essential for system functionality and is therefore considered optional. Adequate storage capacity is required to manage datasets, trained models, and session records generated throughout the development process. These specifications provide a balanced and practical development environment suitable for an undergraduate Final Year Project.

3.4.2 Software Requirement

In addition to the required hardware components, specific software tools and platforms are required to support the development, implementation, and evaluation of the BioType continuous authentication system. These software components are used to capture keystroke data, manage system communication, perform preprocessing and feature transformation, train the deep learning model, and evaluate authentication performance. Table 3.5 summarizes the software requirements used throughout the development of the BioType system

.

Table 3.5 Software Requirements for the BioType System

Category	Software	Description
Frontend	HTML, CSS, JavaScript	To develop the web-based interface that captures keystroke events and sends windowed keystroke data to the backend system.
Backend	Flask	To manage communication between the user device and the authentication system, including enrollment, session handling, and continuous authentication responses.
	Python	To implement keystroke preprocessing, feature transformation, continuous authentication logic, and deep learning model integration
Machine Learning	TensorFlow	To implement and train the Siamese Neural Network with triplet loss for similarity-based keystroke authentication.
	NumPy and SciPy	To process time-based keystroke data and perform linear interpolation to standardize variable length keystroke windows.
	GAFMAT Algorithm	To convert keystroke timing sequences into image like representations suitable for deep learning input

The selected software components were chosen to support the full development lifecycle of the BioType continuous authentication system. Frontend technologies are required to capture keystroke events transparently during user interaction, while the backend framework manages data flow, session context, and authentication decisions. Python and its associated scientific libraries provide a flexible and efficient environment for preprocessing keystroke data, performing feature transformation, and implementing continuous authentication logic. TensorFlow supports the development and training of the Siamese Neural Network used for similarity-based authentication. The GAFMAT algorithm enables transformation of keystroke timing data into representations suitable for deep learning input. Database support allows systematic storage of user templates and session records, while visualization tools assist in performance evaluation and analysis. Together, these software tools provide a practical. and cohesive

environment for implementing and evaluating the proposed system within an undergraduate Final Year Project scope.

3.5 Conclusion

In conclusion, this chapter presented a comprehensive overview of the project methodology adopted for the development of the BioType continuous authentication system based on keystroke dynamics. The iterative development methodology was highlighted as the chosen approach due to its suitability for extending an existing static authentication model into a continuous authentication framework. Each iteration of the methodology was discussed in detail, providing a clear understanding of how system components were progressively designed, implemented, and refined.

The system architecture was also outlined, illustrating the flow of data and interactions between components involved in continuous authentication, including keystroke data capture, session segmentation, preprocessing, feature transformation, deep learning inference, and decision making. This architectural representation demonstrates how continuous user identity verification is achieved throughout an active session.

In addition, the chapter detailed the hardware and software requirements required to support system development and operation. These requirements ensure that the BioType system can be implemented and evaluated using standard computing resources without the need for specialized hardware. Overall, this chapter establishes a solid foundation for the subsequent implementation and evaluation stages of the project, ensuring that the system development remains aligned with the project objectives.

REFERENCE

Bansal, P., & Ouda, A. (2024). Continuous authentication in the digital age: An analysis of reinforcement learning and behavioral biometrics. *Computers, 13*(4). https://doi.org/10.3390/computers13040103

Budžys, A., Kurasova, O., & Medvedev, V. (2025). Integrating deep learning and data fusion for advanced keystroke dynamics authentication. *Computer Standards and Interfaces, 92*. https://doi.org/10.1016/j.csi.2024.103931

Muralidharan, A., Eaman, A., & Hassan, E. (2025). A comparative analysis of machine learning models for behavioral biometric authentication using keystroke dynamics. *Procedia Computer Science, 265*, 116–123. https://doi.org/10.1016/j.procs.2025.07.163

Shadman, R., Wahab, A. A., Manno, M., Lukaszewski, M., Hou, D., & Hussain, F. (2025). Keystroke dynamics: Concepts, techniques, and applications. https://doi.org/10.1145/3733103

Shende, K., Marbate, M., Hore, P., Wazalwar, S., & Wyawahare, N. (2025). A review on behavioral biometric authentication system. *International Conference on Emerging Trends in Engineering and Technology, ICETET*. https://doi.org/10.1109/ICETETSIP64213.2025.11156378

Shobha, K., Kathal, A., Singh, A., Krish, U., & Gupta, M. (2025). AI-powered behavioral biometrics for continuous authentication. *International Conference on Smart Systems for Applications in Electrical Sciences, ICSSES 2025*. https://doi.org/10.1109/ICSSES64899.2025.11009421

Valacich, J. S., Weisgarber, P. A., Jenkins, J. L., Wilson, D. W., & Kim, D. (2025). Revolutionizing competency assessment: The role of digital behavioral biometrics. *2025 MIPRO 48th ICT and Electronics Convention, MIPRO 2025 - Proceedings*, 1459–1464. https://doi.org/10.1109/MIPRO65660.2025.11132076

Subash, A., Song, I., Lee, I., & Lee, K. (2026). Adaptability of current keystroke and mouse behavioral biometric systems: A survey. *Computers and Security, 160*. Elsevier Ltd. https://doi.org/10.1016/j.cose.2025.104731

Tharun, & Sangeetha. (2025). AI-based keystroke dynamics for user authentication.

Azmat, H. (n.d.). Behavioral biometrics and continuous authentication as a foundation for post-password cybersecurity.

Leung, K. C., Iefimov, R., Nadim, M., Rezvi, R. H., & Alsaeed, A. (n.d.). Analyzing keystroke dynamics for user authentication.

Gilbert, C., & Gilbert, M. A. (2025). Continuous user authentication on mobile devices. *International Research Journal of Advanced Engineering and Science, 10*(1), 158–173.

Shrivastava, A., & Bollavarapu, S. (2025). Exploring keystroke dynamics: Enhancing authentication through typing patterns (pp. 3127–3140). https://doi.org/10.2991/978-94-6463-858-5_261

Kiselev, V., Kropotov, D., & Pronina, N. (2024). Handwritten documents author verification based on the Siamese network. *The International Archives of the Photogrammetry, Remote Sensing and Spatial Information Sciences, XLVIII-2/W5-2024*, 73–78. https://doi.org/10.5194/isprs-archives-xlviii-2-w5-2024-73-2024

How are biometric systems evaluated? (n.d.). Retrieved December 2, 2025, from https://www.biometricupdate.com/202405/how-are-biometric-systems-evaluated

Martins, A., Dias, T., Dias, A., Vitorino, J., Maia, E., & Praça, I. (2025). Keystroke dynamics for intelligent biometric authentication with machine learning. *Discover Applied Sciences, 7*(9). https://doi.org/10.1007/s42452-025-07449-5

Das, S., Priyadarshini, R., Mishra, M., & Barik, R. K. (2024). Leveraging towards access control, identity management, and data integrity verification mechanisms in blockchain-assisted cloud environments: A comparative study. *Journal of Cybersecurity and Privacy, 4*(4), 1018–1043. https://doi.org/10.3390/jcp4040047

Shanmugavalli, V., & Kannan, A. R. (2024). Optimizing dynamic keystroke pattern recognition with hybrid deep learning technique and multiple soft biometric factors. *International Journal of Computers, Communications and Control, 19*(2). https://doi.org/10.15837/ijccc.2024.2.6097

Smith, B. M., Lowe, J. D., Matthew, E. C., & Caler, L. (n.d.). Role-based access control (RBAC) via metadata policies: Implementing fine-grained security rules through metadata-driven identity management.

Umar, S., Raghu Veeramachineni, V., Thummala, R., Ginjupalli, S., & Safare, R. (2023). Role-based access control (RBAC) vs. attribute-based access control (ABAC) for cloud security. *Educational Administration: Theory and Practice, 29*(3), 1398–1406. https://doi.org/10.53555/kuey.v29i3.9454

Ibrahim Kamba, M., & Dauda, A. (2025). The role of multi-factor authentication (MFA) in preventing cyber attacks. *International Journal of Research Publication and Reviews, 6*. www.ijrpr.com

Wang, X., Shi, Y., Zheng, K., Zhang, Y., Hong, W., & Cao, S. (2022). User authentication method based on keystroke dynamics and mouse dynamics with scene-irrelevant features in hybrid scenes. *Sensors, 22*(17). https://doi.org/10.3390/s22176627

Fide, M., & Anarim, E. (2025). User authentication on remote connections with Siamese networks using keyboard usage behavior and corresponding noise performance

International Conference on Information Systems Security and Privacy, 2, 585–594. https://doi.org/10.5220/0013252500003899

FYP BIOTYPE.pdf

My Student

My Student

Universiti Teknologi MARA

Document Details

Submission ID

trn:oid:::13381:126743276

Submission Date

Jan 23, 2026, 12:26 PM GMT+8

Download Date

Jan 23, 2026, 12:35 PM GMT+8

File Name

FYP BIOTYPE.pdf

File Size

2.2 MB

69 Pages

16,291 Words

92,999 Characters

4% Overall Similarity

The combined total of all matches, including overlapping sources, for each database.

Filtered from the Report

- Bibliography
- Quoted Text
- Submitted works

Match Groups

43 Not Cited or Quoted 3%
Matches with neither in-text citation nor quotation marks

7 Missing Quotations 0%
Matches that are still very similar to source material

0 Missing Citation 0%
Matches that have quotation marks, but no in-text citation

0 Cited and Quoted 0%
Matches with in-text citation present, but no quotation marks

Top Sources

2% Internet sources
2% Publications
0% Submitted works (Student Papers)

Integrity Flags

1 Integrity Flag for Review

Hidden Text
3 suspect characters on 3 pages
Text is altered to blend into the white background of the document.

Our system's algorithms look deeply at a document for any inconsistencies that would set it apart from a normal submission. If we notice something strange, we flag it for you to review.

A Flag is not necessarily an indicator of a problem. However, we'd recommend you focus your attention there for further review.

FYP BIOTYPE.pdf

My Student

My Student

Universiti Teknologi MARA

Document Details

Submission ID

trn:oid:::13381:126743276

Submission Date

Jan 23, 2026, 12:26 PM GMT+8

Download Date

Jan 23, 2026, 12:35 PM GMT+8

File Name

FYP BIOTYPE.pdf

File Size

2.2 MB

69 Pages

16,291 Words

92,999 Characters

26% detected as AI

The percentage indicates the combined amount of likely AI-generated text as well as likely AI-generated text that was also likely AI-paraphrased.

Caution: Review required.

It is essential to understand the limitations of AI detection before making decisions about a student's work. We encourage you to learn more about Turnitin's AI detection capabilities before using the tool.

Detection Groups

31 AI-generated only 22%
Likely AI-generated text from a large-language model.

10 AI-generated text that was AI-paraphrased 4%
Likely AI-generated text that was likely revised using an AI-paraphrase tool or word spinner.

Disclaimer
Our AI writing assessment is designed to help educators identify text that might be prepared by a generative AI tool. Our AI writing assessment may not always be accurate (i.e., our AI models may produce either false positive results or false negative results), so it should not be used as the sole basis for adverse actions against a student. It takes further scrutiny and human judgment in conjunction with an organization's application of its specific academic policies to determine whether any academic misconduct has occurred.

Frequently Asked Questions

How should I interpret Turnitin's AI writing percentage and false positives?
The percentage shown in the AI writing report is the amount of qualifying text within the submission that Turnitin's AI writing detection model determines was either likely AI-generated text from a large-language model or likely AI-generated text that was likely revised using an AI paraphrase tool or word spinner.

False positives (incorrectly flagging human-written text as AI-generated) are a possibility in AI models.

AI detection scores under 20%, which we do not surface in new reports, have a higher likelihood of false positives. To reduce the likelihood of misinterpretation, no score or highlights are attributed and are indicated with an asterisk in the report (*%).

The AI writing percentage should not be the sole basis to determine whether misconduct has occurred. The reviewer/instructor should use the percentage as a means to start a formative conversation with their student and/or use it to examine the submitted assignment in accordance with their school's policies.

What does 'qualifying text' mean?
Our model only processes qualifying text in the form of long-form writing. Long-form writing means individual sentences contained in paragraphs that make up a longer piece of written work, such as an essay, a dissertation, or an article, etc. Qualifying text that has been determined to be likely AI-generated will be highlighted in cyan in the submission, and likely AI-generated and then likely AI-paraphrased will be highlighted purple.

Non-qualifying text, such as bullet points, annotated bibliographies, etc., will not be processed and can create disparity between the submission highlights and the percentage shown.